Students please affix one of your self adhesive identification labels to this space. Do not obscure other parts of this page with the label. If you do not have a self adhesive identification label, please complete the following information. Write your name as it appears on your badge. **Your Name:** _____ **Participation Number:** [ ][ ][ ] 0 3 [ ][ ][ ] 0 [ ] **Two letter state abbreviation.** → **State code (0301, 0302, …… to 0350)** **Team member number (01, 02, 03, or 04)**	**Students please do not write or mark within this box.** ***Judges, after this skill sheet has been scored and double checked, write the total score for this activity in the blank below.*** **Skill Activity Score:** _____ **Judges Initials:** _____

2010 National Agriculture Mechanics Career Development Event: Integrated Pest Management Industry and Marketing Systems Skill Activity

Situation: You work for a lawn care company and one of your customers owns a large office complex. For aesthetics and cooling, the office parking lot contains 25 turf strips (warm season turf grass), each measuring 40-in. x 72-in. You are to spray these turf strips with Certainty™ (post-emergence systemic) herbicide to control yellow nutsedge. You will be using a SOLO 416 Backpack Battery Sprayer. (This sprayer is considered a hand-held sprayer.) Your spray width will be 20-in and you will walk at a speed of 1.5 mph.

Directions: Complete the following. DO NOT WRITE OR MARK IN OR ON THE REFERENCE MATERIALS. LEGIBABLY write each answer in the space provided. NOTE: Helpful formulas can be found on pages 173 and 176 of the TeeJet Catalog.

Questions:	Answer	Score
1. What is the total turf area (ft^2) to be sprayed? (4 pts.)	_____ ft^2	_____
2. To apply the herbicide solution as directed on the product label (for a hand-held sprayer):		
A. How many gallons of water should you put in the spray tank? (3 pts.)	_____ gal.	_____
B. How many teaspoons of surfactant should you put in the spray tank? (3 pts.)	_____ tsp.	_____
3. What nozzle flow rate (GPM) is needed to achieve the recommended application rate? (4 pts.)	_____ GPM	_____
4. For the TeeJet spray nozzles provided:		
A. Which nozzle is the **best** to use for this spraying job? (Write nozzle number in blank.) (4 pts.)	_____ Nozzle	_____
B. What spraying pressure should be used with the nozzle selected to achieve the recommended application rate? (3 pts.)	_____ PSI	_____
5. What is the SOLO order number for the large drift guard attachment for the Model 416 Backpack Battery Sprayer? (3 pts.)	_____ (order #)	_____
6. Answer the following about the battery used in the SOLO Model 416 Backpack Battery Sprayer:		
A. What is the voltage rating of the battery? (3 pts.)	_____ (name)	_____
B. What is the SOLO order number for the battery? (3 pts.)	_____ (order #)	_____

solo®

(D) *Ersatzteilliste* **Akku-Druckspritze** **416**

Inhaltsverzeichnis Seite

Tragegestell, Pumpe, Elektronik	2
Behälter, Tragegurt	4
Spritzrohr	5
Zubehör	6
Ersatzteile	7
Bestell-Richtlinien	7

(GB) *Spare parts list* **Backpack sprayer with rechargeable battery** **416**

Table of contents Page

Carrying frame, pump	2
Tank, Carrying strap	4
Spray wand	5
Accessories	6
Spare Parts	7
Directions for Ordering	7

(F) *Liste de pièces de rechange* **Pulvérisateur à batterie** **416**

Table des matières Page

Cadre porteur, pompe	2
Réservoir, bretelle	4
Tube de pulvérisation	5
Accessories	6
Pièces de rechance	7
Directives pour les comandes	7

(E) *Lista de piezas de recambio* **Rociador a presión con batería** **416**

Indice Página

Bastidor, bomba	2
Deposito, cinturon portador	4
Tubo	5
Accesorios	6
Piezas de recambio	7
Directivas de pedino	7

http://www.solo-germany.com
e-mail: info@solo-germany.com

Telefon 07031/301-0
Telefax 07031/301-130
Export 07031/301-149

Zentral-Ersatzteilservice
Telefon 07031/301-209
Telefax 07031/301-206

SOLO Kleinmotoren GmbH
Postfach 60 01 52
D-71050 Sindelfingen
Germany

9 416 700 06/07

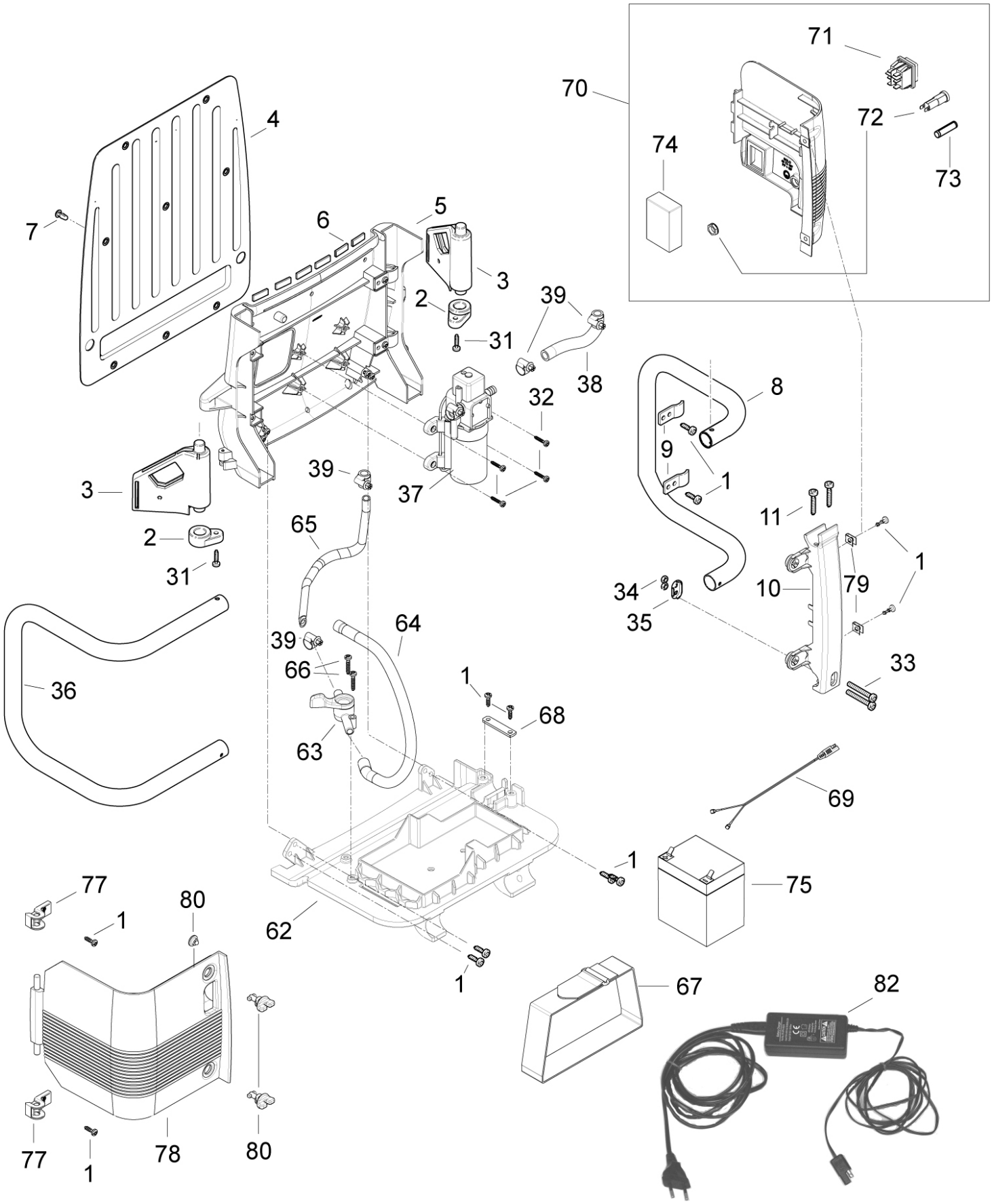
71
70
72
74
73
4
7
6
5
3
2
39
31
38
32
8
9
1
3
39
37
11
2
65
1
31
34
10
79
35
64
39
66
33
36
1
68
63
69
1
77
80
75
1
62
1
67
82
77
1
78
80

Bild-Nr. Pos.-No. Pos.-No. Pos.-No.	Bestell-Nr. Order-No. No. de Cde Ref.-Nr.	Menge Quantity Nombres Cantidad	**Tragegestell, Pumpe, Elektronik**	**Carrying frame, pump**	**Cadre porteur, pompe**	**Bastidor, bomba**
1	00 18 274	12	Linsenschraube 5x16 mm	Screw	Vis	Tornillo
2	40 74 126	2	Kappe	Cap	Capuchon	Caperuza
3	40 74 275	2	Gurtbefestigung	Strap holder	Fixation de bretelle	Fijacion
4	00 98 101	1	Rückenkissen	Back cushion	Coussin dorsal	Almohadilla
5	40 73 222	1	Rückenplatte	Back plate	Plaque dorsale	Chapa
6	00 61 361	6	Filz 15x55x1,5 mm	Felt	Feutre	Fieltro
7	00 44 144	6	Nieten 5,7x18 mm	Rivet	Rivet	Remache
8	40 35 119 25	1	Rohrbügel rechts	Frame right	Tube coudé droite	Estribo
9	40 46 100 25	2	Spannbügel	Frame	Etrier de tension	Estribo
10	40 73 132	1	Stützstrebe	Support bracket	Antibalancant	Tirante
11	00 18 275	2	Linsenschraube 5x30mm	Screw	Vis	Tornillo
31	00 18 363	2	Linsenschraube 5x20 mm	Screw	Vis	Tornillo
32	00 18 356	4	Linsenschraube 4x20 mm	Screw	Vis	Tornillo
33	00 18 340	2	Zylinderschraube M5x40 mm	F.H. screw	Vis	Tornillo
34	00 28 137	2	Sechskantmutter M5	Hex. nut	Ecrou	Tuerca
35	60 43 107	1	Flanschblech	Flange plate	Tôle de bride	Chapa
36	40 35 120 25	1	Rohrbügel links	Frame left	Tube coudé gauche	Estribo
37	44 00 309	1	Pumpe	Pump	Pompe	Bomba
38	00 64 234	110 mm	Schlauch10x3 mm	Hose	Tuyau	Tubo
39	00 66 192	4	Schelle 8-16 mm	Clamp	Collier	Abrazadera
62	40 73 166	1	Bodenplatte	Base plate	Plaque de base	Chapa
63	48 00 214	1	Abstellhahn	Cock	Robinet	Llave
64	00 64 137	360 mm	Schlauch10x2 mm	Hose	Tuyau	Tubo
65	00 64 137	320 mm	Schlauch10x2 mm	Hose	Tuyau	Tubo
66	00 18 257	2	Linsenschraube 5x25 mm	Screw	Vis	Tornillo
67	53 00 648	1	Klettgurt	Hookand loop strap	Bretelle	Cinturon portador
68	50 42 704	1	Lasche	Flap	Eclisse	Eclisa
69	00 84 112	1	Ladekabel	Plug	Fiche	Enchufe
70	41 00 110	1	Seitenteil rechts enth. (-> 70-74	Side part right incl. (-> 70-74	Element lateral y inclus: (-> 70-74	Parte Lateral incl. (-> 70-74
71	00 84108	1	Schalter	Switch	Interupteur	Interuptor
72	00 84 054	1	Feinsicherungshalter	Support	Support	Suporte
73	00 84 055	1	Sicherung Glas 5x20 mm 4 A	Led display	Led indication	Led indicadora
74	00 84 052	1	Platine <-)	Plate <-)	Platine <-)	Platino <-)
75	00 84 111	1	Akku 12 V, 5 Ah	Rechargeable battery 12 V, 5 Ah	Batterie 12 V, 5 Ah	Bateria de 12 V, 5 Ah
77	40 74 206	2	Scharnier	Hinge	Charniere	Charnela
78	40 73 168	1	Seitenteil links	Side part left	Element lateral	Parte Lateral
79	00 28 149	2	Blechmutter 4,8 mm	Nut	Ecrou de carrosserie	Tuerca
80	20 74 682 25	2	Verschlussbolzen	Bolt	Boulon	Perno
81	00 94 252	2	Gummi Elemente	Rubber spacer	Butee de Capot	Elemento de goma
82	00 84 689	1	Ladegerät	Battery charger	Rechargeur batterie	Aparato de carga

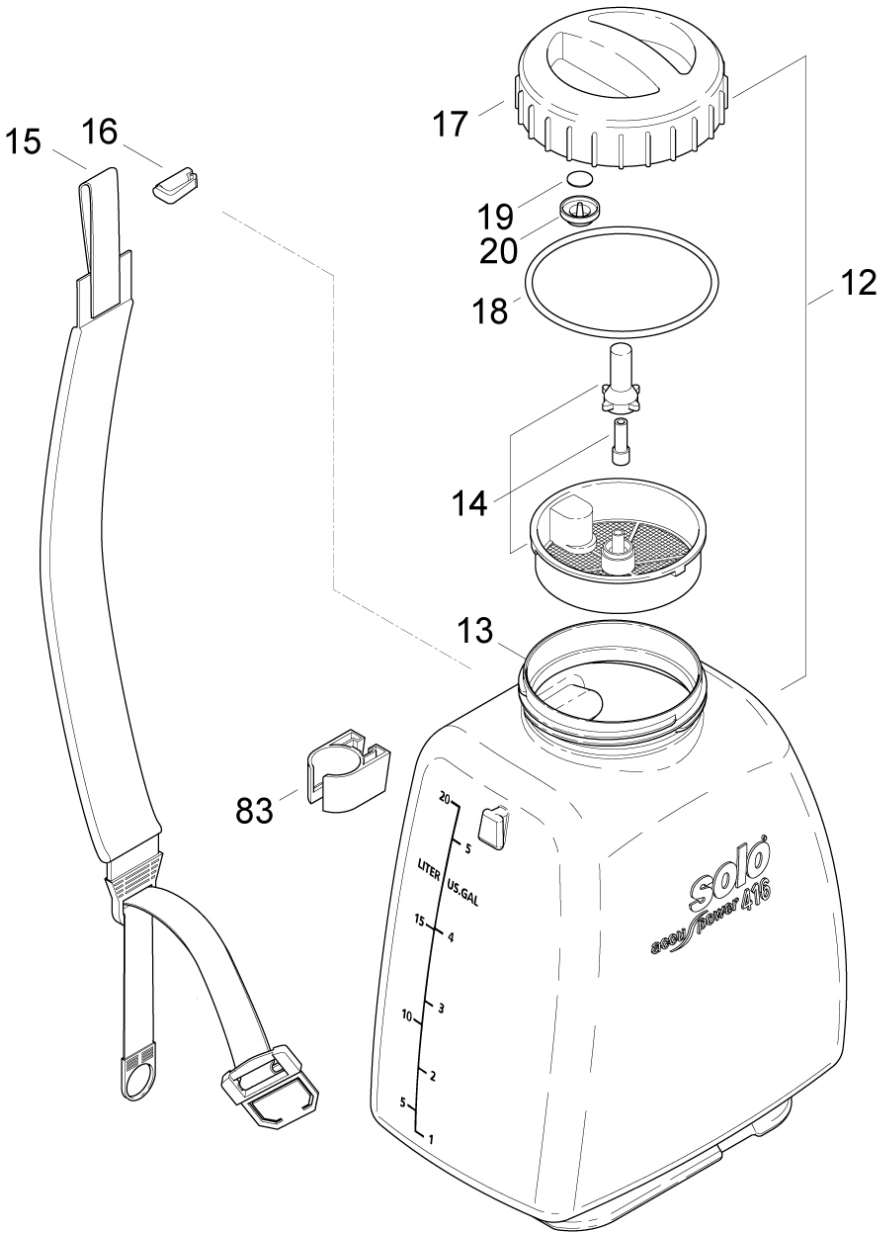

Bild-Nr. Pos.-No. Pos.-No. Pos.-No.	Bestell-Nr. Order-No. No. de Cde Ref.-Nr.	Menge Quantity Nombres Cantidad	**Behälter, Tragegurt**	**Tank, Carrying strap**	**Réservoir, bretelle**	**Deposito, cinturon portador**
12	42 00 345	1	Behälter 20l komplett enth. (-> 12-20	Tank 20l cpl. incl. (-> 12-20	Réservoir 20L cpl. y inclus: (-> 12-20	Deposito 20l incl. (-> 12-20
13	42 00 142	1	Behälter 20 l	Tank 20l	Réservoir 20L	Deposito 20l
14	42 00 104	2	Einfüllkorb mit Sieb	Filler basket	Entonnoire	Cesta
15	43 00 341	2	Tragegurt	Carrying strap	Bretelle	Cinturon portador
16	40 74 412 25	2	Gurthalter	Strap holder	Port-bretelle	Fijacion
17	40 73 420	1	Deckel	Cover	Couvercle	Tapa
18	00 62 331	1	O-Ring 124x4,5 mm	O-ring	Joint torique	Anillo
19	40 61 464	1	Ventilplatte	Valve plate	Joint de soupape	Chapa
20	40 74 123 25	1	Belüftungsdeckel <-)	Cover <-)	Couvercle d'aération <-)	Tapa <-)
83	40 73 121	1	Spritzrohrhalterung	Tube support	Support de tube	Soporte
84	49 00 109	1	Hüftgurt	Waist belt	Ceinture	Cinturon

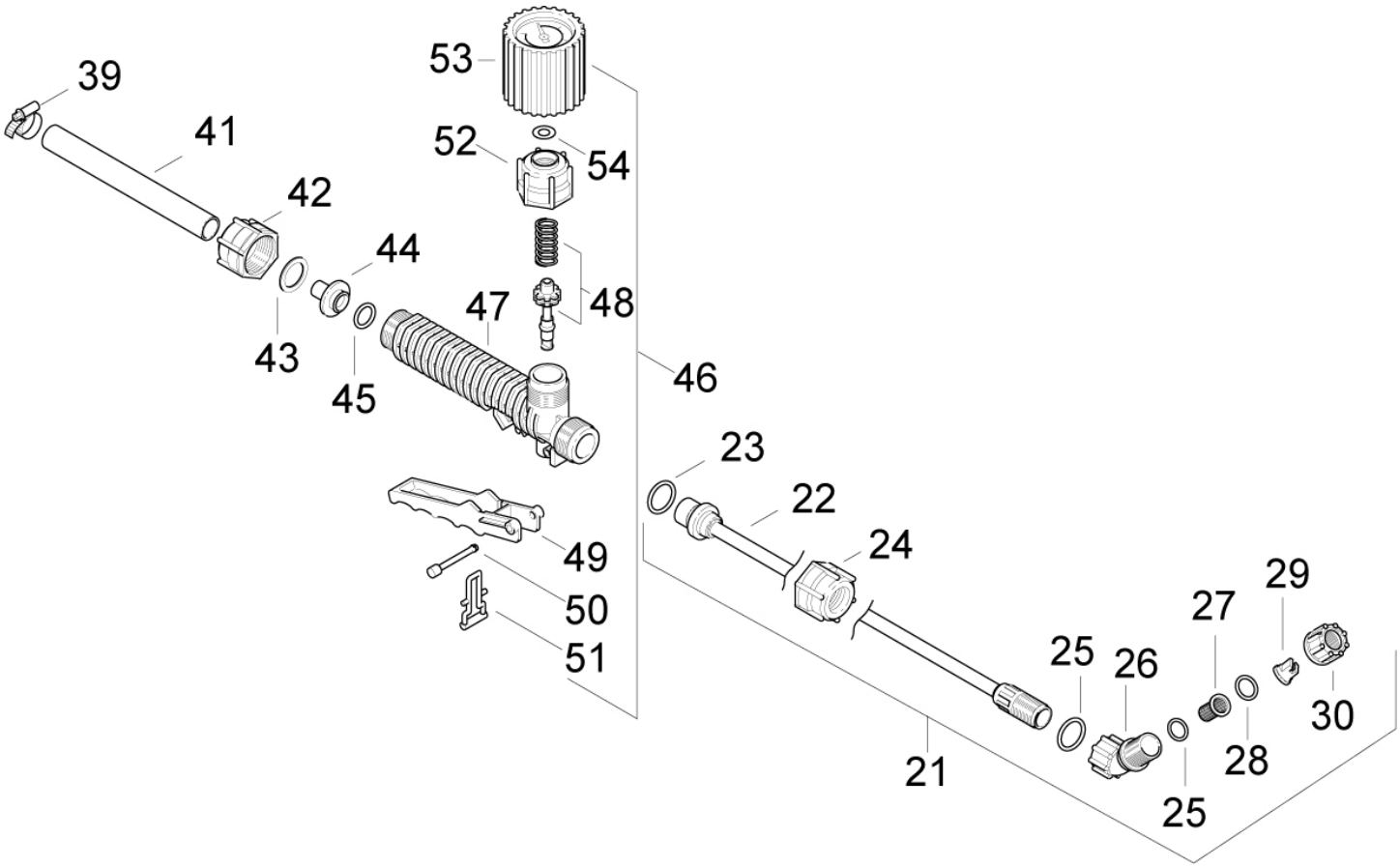

Bild-Nr. Pos.-No. Pos.-No. Pos.-No.	Bestell-Nr. Order-No. No. de Cde Ref.-Nr.	Menge Quantity Nombres Cantidad	**Spritzrohr**	**Spray wand**	**Tube de pulvérisation**	**Tubo**
21	49 00 570	1	Spritzrohr mit Düse enth. (-> 21-30	Spray tube w. nozzle incl. (-> 21-30	Tube de pulv. avec buse y inclus (-> 21-30	Tubo y tobera incl. (-> 21-30
22	49 00 391	1	Spritzrohr	Spray tube	Tube de pulvérisation	Tubo
23	00 62 258	1	O-Ring 16x3 mm	O-ring	Joint torique	Anillo
24	40 74 337	1	Überwurfmutter R 3/4""	Screw cap	Ecrou de raccord	Tuerca
25	00 62 115	2	O-Ring 10x2 mm	O-ring	Joint torique	Anillo
26	40 74 527 25	1	Winkelstück R 3/8""	Elbow	Coude	Codo
27	27 00 316	1	Filtereinsatz	Filter insert	Elément filtre	Filtro
28	00 62 106	1	O-Ring 12x2 mm	O-ring	Joint torique	Anillo
29	40 74 504	1	Düse Flachstrahl	Flat spray nozzle	Gicleur à jet plat	Tobera de chorro ancho
30	40 74 148	1	Überwurfmutter R 3/8"" <-)	Screw cap <-)	Ecrou de raccord <-)	Tuerca <-)
39	00 66 192	1	Schelle 8-16 mm	Clamp	Collier	Abrazadera
41	00 64 234	1,5 m	Schlauch 10x3 mm	Hose	Tuyau	Tubo
42	40 74 987	1	Überwurfmutter R 3/4""	Screw cap	Ecrou de raccord	Tuerca
43	00 31 347	1	Scheibe 17x24x1 mm	Washer	Rondelle	Arandela
44	40 74 500	1	Klemmstück	Clamping piece	Pièce de serrage	Abrazadera
45	00 62 271	1	O-Ring 10x3 mm	O-ring	Joint torique	Anillo
46	48 00 243	1	Handventil enth. (-> 46-54	Shut-off valve incl. (-> 46-54	Robinet d'arrêt y inclus (-> 46-54	Empunadura incl(-> 46-54
47	40 74 331	1	Hahngehäuse	Housing	Carter robinet	Carter
48	06 10 402	1	Reparaturset Handventil	Repair kit	Jeu de réparation	Juego rep.
49	40 74 335 25	1	Handhebel	Lever	Levier	Palanca
50	40 74 295 25	1	Bolzen 4,8x26,5 mm	Bolt	Goujon	Perno
51	40 74 329 25	1	Haltebügel	Support bracket	Crochet	Estribo
52	40 74 338	1	Überwurfmutter R 3/4""	Screw cap	Ecrou de raccord	Tuerca
53	49 00 623	1	Manometer	Pressure gauge	Manomètre	Manometro
54	00 62 249	1	O-Ring 5x3 mm <-)	O-ring <-)	Joint torique <-)	Anillo <-)

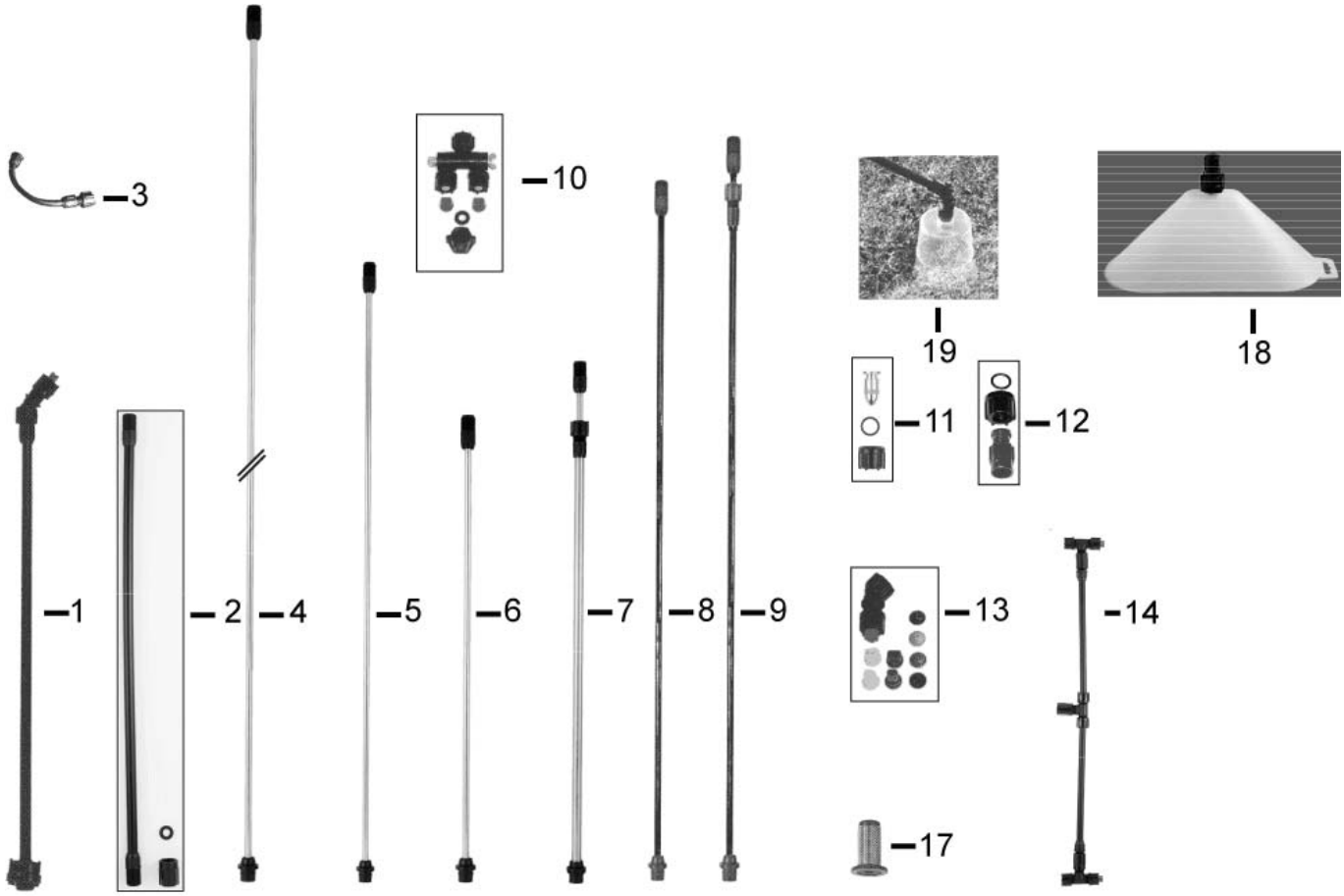

Bild-Nr. Pos.-No. No.Pos. Pos.-No.	Bestell-Nr. Order-No. No. de Cde Ref.-Nr.	**Zubehör**	**Accessories**	**Accessories**	**Accesorios**
1	49 00 439	Spritzrohr PVC, 50 cm	Spray tube PVC 50 cm	Tuyau pulvérisation, 50 cm	Tubo de pulverización, 50 cm
2	49 00 513	Verlängerung Spritzrohr PVC, 50 cm	Extension tube PVC, 50 cm	Rallonge de lance PVC, 50 cm	Tubo alargador PVC, 50 cm
3	49 00 450	Biegbare Spritz-rohrverlängerung 15 cm	Flexible spray tube 15 cm	Lance pliable 15 cm	Tubo de pulverización flexible 15 cm
4	49 00 528	Baumspritzrohr Messing, 2-teilig, 150 cm	Tree spray tube, 2 parts, 150 cm	Tube de lance, en 2 parties, 150 cm	Tubo pulverizador de arboles 2 piezas, 150 cm
5	49 00 428	Spritzrohr Messing 75 cm	Spray tube 75 cm	Tuyau pulvérisation, 75 cm	Tubo de pulverización, 75 cm
6	49 00 519	Spritzrohr Messing 50 cm	Extension tube, 50 cm	Tuyau pulvérisation, 50 cm	Tubo de pulverización, 50 cm
7	49 00 478	Teleskop-Spritzrohr Messing, 57 cm – 100 cm	Telescopic spray tube, 57 cm – 100 cm	Tuyau pulvérisation, téles-copique, 57 cm – 100 cm	Tubo de pulverización, teles-cópico, 57 cm – 100 cm
8	49 00 449	Spritzrohr Carbon 120 cm	Spray tube carbonate, 120 cm	Tuyau pulvérisation, carbone, 120 cm	Tubo de pulverización carbon, 120 cm
9	49 00 445	Teleskop-Spritzrohr Carbon 120 cm -230 cm	Telescopic spray tube carbonate	Tuyau pulvérisation, téles-copique carbone	Tubo de pulverización teles-cópico tipo carbon
10	49 00 477	Gabeldüse	Double spray nozzle	Buse double	Tobera doble
11	49 00 206	Hochstrahldüse Messing	Adjustable nozzle	Gicleur à jet élevé	Tobera de chorro alto
12	49 00 525	Hochstrahldüse Kunststoff	Adjustable nozzle	Gicleur à jet élevé	Tobera de chorro alto
13	49 00 448	Düsensatz enth.: Winkelstück, Überwurfmutter, 2 x O-Ringe 10 mm, 1 x O-Ringe 12 mm, Filtereinsatz - 3 Flachstrahldüsen, - 3 Hohlkegeldüsen, - 2 Pralldüsen	Nozzle-kit incl.: elbow, screw cap, 2 x ring 10 mm 1 x ring 12 mm filter insert - 3 Flat spray Tipp - 3 Hollow cone jet - 2 No-Drift	Pochette joints coude, écrou de raccord 2 x joint torique 10 mm 1 x joint torique 12 mm tamis filtre - 3 Gicleur à jet plat - 3 Gicleur à cône creux - 2 Gicleur	Juego tobera codo tuerca racor 2 x anillo 10 mm 1 x anillo 12 mm filtro - 3 Tobera de chorro plano - 3 Tobera de cono vacio - 2 Tobera angular
14	49 00 514	Spritzbalken 60 cm PVC, 2 Düsen	Spray Boom PVC, 2 nozzles	Rampe de pulvérisation PVC, 2 buses	Barra de pulverización PVC, 2 toberas
17	49 00 539	Kugelventilfilter, Tropfstopp	Ball value filter	Soupape anti-goutte	Filtro con valvula de bola
18	49 00 430	Spritzschirm	Drift guard	Bouclier oval	Pantalla protectora
19	49 00 128	Kleiner Spritzschirm	Drift guard small	Bouclier petit	Pantalla protectora chico
	00 84 110	Akku 12 V, 7,2 Ah	Rechargeable battery 12 V, 7,2 Ah	Batterie 12 V, 7,2 Ah	Bateria de 12 V, 7,2 Ah
	59 00 789	Ladekabel	Plug	Fiche	Enchufe

Bestell-Nr. Order-No. No. de Cde Ref.-Nr.	Menge Quantity Nombres Cantidad	Seite Page Page Pagina
00 18 257	2	2
00 18 274	12	2
00 18 275	2	2
00 18 340	2	2
00 18 356	4	2
00 18 363	2	2
00 28 137	2	2
00 28 149	2	2
00 31 347	1	5
00 44 144	6	2
00 61 361	6	2
00 62 106	1	5
00 62 115	2	5
00 62 249	1	5
00 62 258	1	5
00 62 271	1	5
00 62 331	1	4
00 64 137	360 mm	2
00 64 137	320 mm	2
00 64 234	110 mm	2
00 64 234	1,5 m	5
00 66 192	4	2
00 66 192	1	5
00 84 052	1	2
00 84 054	1	2
00 84 055	1	2
00 84 110	1	6
00 84 111	1	2
00 84 112	1	2
00 84 689	1	2
00 84108	1	2
00 94 252	2	2

Bestell-Nr. Order-No. No. de Cde Ref.-Nr.	Menge Quantity Nombres Cantidad	Seite Page Page Pagina
00 98 101	1	2
06 10 402	1	5
20 74 682 25	2	2
27 00 316	1	5
40 35 119 25	1	2
40 35 120 25	1	2
40 46 100 25	2	2
40 61 464	1	4
40 73 121	1	4
40 73 132	1	2
40 73 166	1	2
40 73 168	1	2
40 73 222	1	2
40 73 420	1	4
40 74 123 25	1	4
40 74 126	2	2
40 74 148	1	5
40 74 206	2	2
40 74 275	2	2
40 74 295 25	1	5
40 74 329 25	1	5
40 74 331	1	5
40 74 335 25	1	5
40 74 337	1	5
40 74 338	1	5
40 74 412 25	2	4
40 74 500	1	5
40 74 504	1	5
40 74 527 25	1	5
40 74 987	1	5
41 00 110	1	2
42 00 104	2	4

Bestell-Nr. Order-No. No. de Cde Ref.-Nr.	Menge Quantity Nombres Cantidad	Seite Page Page Pagina
42 00 142	1	4
42 00 345	1	4
43 00 341	2	4
44 00 309	1	2
48 00 214	1	2
48 00 243	1	5
49 00 109	1	4
49 00 128	1	6
49 00 206	1	6
49 00 391	1	5
49 00 428	1	6
49 00 430	1	6
49 00 439	1	6
49 00 445	1	6
49 00 448	1	6
49 00 449	1	6
49 00 450	1	6
49 00 477	1	6
49 00 478	1	6
49 00 513	1	6
49 00 514	1	6
49 00 519	1	6
49 00 525	1	6
49 00 528	1	6
49 00 539	1	6
49 00 570	1	5
49 00 623	1	5
50 42 704	1	2
53 00 648	1	2
59 00 789	1	6
60 43 107	1	2

(D)

Allgemeine Richtlinien für die Bestellung von Original SOLO Ersatzteilen:
Voraussetzung für eine reibungslose Erledigung sind folgende Angaben:
1. Ersatzteil-Bestellnummer
2. Gewünschte Anzahl
3. Typenbezeichnung des Geräts

Diese Ersatzteilliste ist für die Lieferung und Ausstattung von SOLO Erzeugnissen unverbindlich.
Im Interesse der technischen Weiterentwicklung bleiben Konstruktionsänderungen vorbehalten.

(GB)

General Directions for Ordering Original SOLO Spare Parts:
For correct and diligent processing of your order, please give the following information:
1. Spare Part number
2. Quantity
3. Model and serial number
4. Shipping instructions

Delivery is made in accordance with our general sales and delivery conditions. This spare parts list is non-committal for us with regard to delivery and layout of SOLO products. In favour of technical improvements, design modifications are subject to change without notice.

(F)

Directives générales pour les commandes de pièces de rechange d'origine SOLO:
Il est indispensable de préciser dans toutes les commandes de pièces:
1. le numéro de référence de la pièce
2. la quantité
3. le type de la machine
4. le mode d'expédition

Les livraisons sont effectuées dans le cadre de nos conditions générales de vente.
Toutes modifications réservées.

(E)

Directivas Generales de pedido de la firma SOLO:
Por adelantado de un arreglo sin dificultades necesitamos siguientes indicaciónes:
1. Número de repuesto
2. Numero de cantidad
3. Modelo y número de serial
4. Instrucción de Envió

Esta lista de repuestos no es obligatoria para los envios y/o forma de equipo de los productos SOLO.
En el interés del constante desarollo debemos reservarmos el derecho de cambios.