Students please affix one of your self adhesive identification labels to this space. Do not obscure other parts of this page with the label. If you do not have a self adhesive identification label, please complete the following information. Write your name as it appears on your badge.

Your Name: _____

Participation Number:

			0	3				0	

Two letter state abbreviation. →

State code (0301, 0302, …… to 0350)

Team member number (01, 02, 03, or 04)

Students please do not write or mark within this box.

Judges, after this skill sheet has been scored and double checked, write the total score for this activity in the blank below.

Skill Activity Score: _____

Judges Initials: _____

2009 National FFA Agricultural Mechanics Career Development Event

Machine and Equipment Systems Skill Sheet

There are multiple parts to this activity!

Please read and follow directions carefully! Use your time wisely!

GENERAL INFORMATION/DIRECTIONS:

For this skill activity assume that you are the manager of a farming operation that plans to supplement the farms income by providing deer hunting opportunities to a hunting club in the fall. In order for the venture to be successful, it will be necessary to establish food plots to attract game and provide them with supplemental nourishment for optimum growth and antler development.

The overall food plot operation will encompass approximately 15 acres that will be broken up into 1 to 2 acre plots located in clearings found in wooded areas on the farm. You will be using your John Deere Gator to work the ground, spread the fertilizer, and seed the plots due to their remote location, size, and irregular shapes. You will need to apply 250 lbs. of 12-12-12 fertilizer per acre, plus an additional 20% due to the irregular shape of the food plots. The cargo bed mounted fertilizer spreader weighs 175 lbs. and assumes the individual operating the Gator weighs 200 lbs.

Before the planting can begin, you will need to perform the following tasks: determine how much fertilizer is require for the total acreage, how many trips the Gator will need to make to accomplish that task, and complete your 200 hour or one year maintenance check by performing a check on the drive belt to make sure that it is not out of specs.

_____

PROCEDURES:

1. Because you are working around machinery, safety glasses must be worn at all times.

(Station No. _____) Utility Vehicle Model _____ Identification No. _____

2. How many pounds of fertilizer will you need to purchase? _____ lbs.

3. According to the operator's manual, what is the maximum cargo box load capacity? _____ lbs.

4. What is the vehicles maximum load capacity? _____ lbs.
(Vehicle Load Capacity = GVWR – GVW)

5. How many trips are required to apply the fertilizer? _____ trips

6. Using the operator's manual and information provided, determine the following:

A. What is the minimum recommended drive belt width? _____ inches

B. What is the width of your drive belt? _____ inches

C. If you have to replace the drive belt what is its part number? _____

Skill Activity Score Sheet

Question Number	**Possible**	**Score**
1. Utility vehicle model number: (1)	2	_____
2. Utility vehicle product identification number: (1)	2	_____
3. Pounds of fertilizer required for food plots: (2)	3	_____
4. Maximum load capacity: (3)	2	_____
5. Maximum vehicles load capacity: (4)	4	_____
6. Number of trips to apply fertilizer: (5)	3	_____
7. Student followed drive belt check procedures: (6)	4	_____
8. Recommended drive belt width: (6.A)	2	_____
9. Measured width of drive belt: (6.B)	3	_____
10. Drive belt part number: (6. C)	2	_____
11. Safety and work habits:	3	_____
TOTAL POINTS: (Double check point total and enter on front)	30	_____

Determining Vehicle Load Capacity

Factors in Determining Vehicle Load Capacity

NOTE: Optional equipment or attachments that are not standard equipment, must be included when determining gross vehicle weight, and may reduce cargo box capacity.

• **Gross Vehicle Weight (GVW)** is the combination of the empty vehicle weight, payload, tongue weight, and the weight of any other kits or attachments on the vehicle.

GVW = A+B+C+D+E

• **Gross Vehicle Weight Rating (GVWR)** is the maximum permissible vehicle weight.

GVWR for gas and diesel HPX models = 1383 kg (3050 lb)

• **Payload** is the weight of all occupants plus the cargo box load. **Payload cannot exceed 635 kg (1400 lb).**

• **(A) Occupant load** is the combined weight of all occupants (operator and one passenger).

• **(B) Empty vehicle weight** is the weight of the vehicle (full fluids) without occupant(s) or load or attachments.

• 588 kg (1296 lb) - HPX Gas models

• 668 kg (1473 lb) - HPX Diesel models

• **(C) Cart tongue weight** is the weight measured if the tongue of a loaded cart was placed on a scale. The tongue weight should be approximately 10% of the total of the cart weight and the weight of its load.

• **(D) Cargo box load** is the weight of the cargo in the cargo box. **Cargo box capacity cannot exceed 454 kg (1000 lb).** It may be less depending on the weight of the occupants, attachments and the cart tongue weight.

• **Vehicle Load capacity** is the remaining amount of weight that the vehicle can haul in the cargo box and/or the additional weight from the operator, passenger, cart tongue and attachments.

• **(E) Attachment and Option weight** is the combined weight of all attachments and options that were not standard equipment. Your John Deere dealer can help you with this information.

• **(F) Cart capacity** - Refer to Towing Loads in the Operating Section.

• **Determine maximum vehicle load capacity:**

a. Calculate GVW = A+B+C+D+E

b. Subtract the Gross Vehicle Weight (GVW) from the Gross Vehicle Weight Rating (GVWR).

c. The weight difference between the two numbers is the vehicle load capacity.

Vehicle Load Capacity=GVWR-GVW

d. The Gross Vehicle Weight must be less than or equal to the Gross Vehicle Weight Rating. If GVW exceeds GVWR, remove excess weight from vehicle before operating.

Example:

The example below is for an HPX diesel vehicle with, a 350 lb cargo load, a 200 lb operator, 220 lb of attachments and options (such as a heavy duty brush guard, OPS poly roof, cargo box power lift kit, etc), towing a trailer with 50 lb of tongue weight.

(A) Operator Weight:	200 lb
(B) HPX Diesel:	1473 lb
(C) Tongue Weight:	50 lb
(D) Cargo Load:	350 lb
(E) Attachments and/or options:	220 lb

GVW = 2293 lb (200 + 1473 + 50 + 350 + 220)

Vehicle Load Capacity = GVWR (3050) less GVW (2293)

Vehicle Load Capacity = 757 lb

The remaining vehicle load capacity of 757 lb can be used to haul additional operator, passenger, cargo, cart tongue and attachment weight.

Raising and Lowering Cargo Box

Manual Lift

CAUTION: Avoid injury!

Park machine on a level surface and lock park brake before manually raising and securing cargo box in raised position.

A cargo box containing material can be heavy. Empty some or all material until cargo box can safely be raised manually.

1. Park the vehicle safely. (See Parking Safely in the SAFETY section.)

2. Empty cargo box by hand.

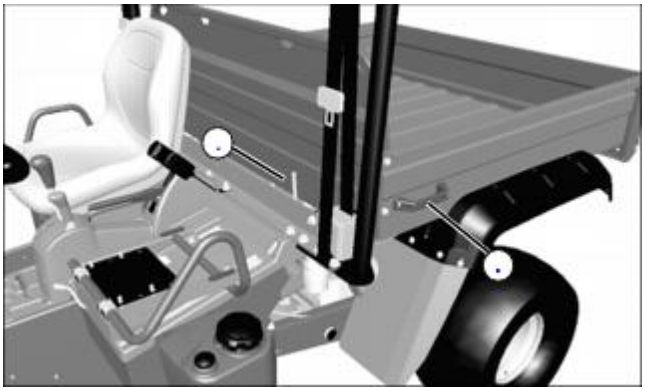

MX35573

3. Release latch (A) by pushing inward toward center of machine. Raise cargo box manually with lift handle (B) on side of cargo box.

CAUTION: Avoid injury! Cargo box can fall if not secured properly. Remove key from ignition and lock support rod securely before doing any service under raised cargo box.

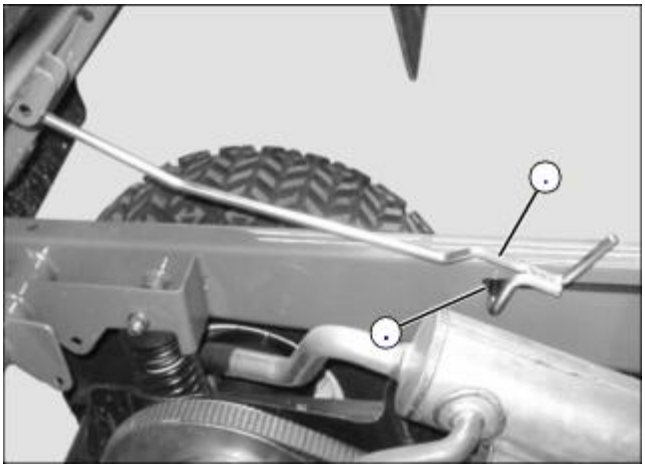

MX31004

4. Push support rod (C) down to lock into slot (D) when cargo box is fully raised.

5. To lower cargo box, raise cargo box slightly using lift handle.

6. Release support rod from latch slot by pulling up on lower end of rod.

NOTE: Lowering the box completely will allow the support rod to latch at the front of cargo box.

7. Slowly lower cargo box. Support rod will slide along slotted channel.

8. Push down on cargo box handle until support rod latches into cargo box with an audible snap.

Power Lift (If equipped)

IMPORTANT: Avoid damage! A “hissing” or “squealing” sound when cargo box is fully raised or lowered or when box is heavily loaded indicates hydraulic system operating at pressure relief. To prevent unnecessary wear or damage, minimize operation at pressure relief. Do not operate the Power Lift actuator beyond full stroke or exceed the cargo box weight capacity.

1. Park the vehicle safely. (See Parking Safely in the SAFETY section.)

2. Turn key to ON position.

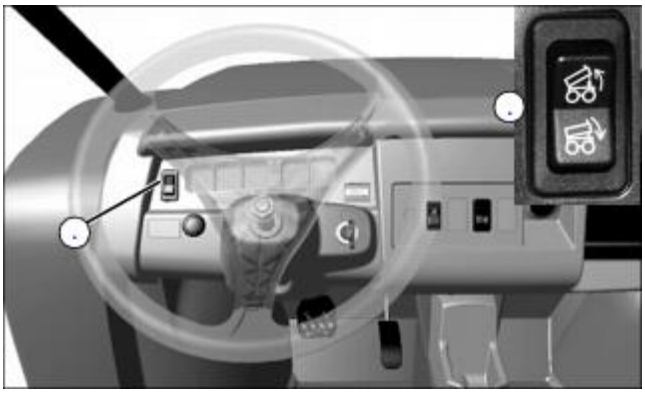

MX35563 MX30610

3. The cargo box switch (A) is located on the left side of the instrument panel.

4. Raise cargo box by pressing and holding top of switch (A). Release switch when box is at desired dump height or when reaching maximum height.

NOTE: Allowing the Power Lift hydraulics to operate at pressure relief briefly (less than one second) after cargo box is fully lowered will help keep cargo box secure and reduce rattling caused by travel vibrations.

5. Completely lower cargo box by pressing and holding bottom of switch (A).

6. Turn key to OFF position.

Service Transmission

Transaxle Oil

Use the appropriate oil viscosity based on these air temperature ranges. Operating outside of these recommended oil air temperature ranges may cause premature hydrostatic transmission or hydraulic system failures.

IMPORTANT: Avoid damage! Mixing of LOW VISCOSITY HY - GARD™ and HY - GARD™ oils is permitted. DO NOT mix any other oils in this transmission. DO NOT use engine oil or “Type F” (Red) Automatic Transmission Fluid in this transmission.

John Deere J20C HY-GARD™ transmission and hydraulic oil is recommended. John Deere J20D Low Viscosity HY-GARD™ transmission and hydraulic oil may be used, if within the specified temperature range.

Other oils may be used if above recommended John Deere oils are not available, provided they meet one of the following specifications:

• John Deere Standard JDM J20C;

• John Deere Standard JDM J20D.

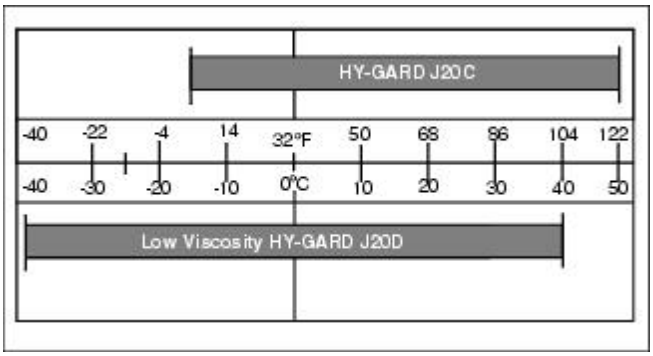

4WD Front Differential Oil

Use the appropriate oil viscosity based on these air temperature ranges. Operating outside of these recommended oil air temperature ranges may cause premature hydrostatic transmission or hydraulic system failures.

IMPORTANT: Avoid damage! Mixing of LOW VISCOSITY HY - GARD™ and HY - GARD™ oils is permitted. DO NOT mix any other oils in this transmission. DO NOT use engine oil or “Type F” (Red) Automatic Transmission Fluid in this transmission.

John Deere J20D Low Viscosity HY-GARD™ transmission and hydraulic oil is recommended.

Other oils may be used if above recommended John Deere oils are not available, provided they meet the following specifications:

• John Deere Standard JDM J20D.

Checking 4WD Front Differential Oil Level

1. Park machine safely. (See Parking Safely in the SAFETY section.) Allow machine to cool down for at least one hour.

IMPORTANT: Avoid damage! Dirt and debris in oil may cause damage to the 4WD differential. Clean area around opening before removing plug.

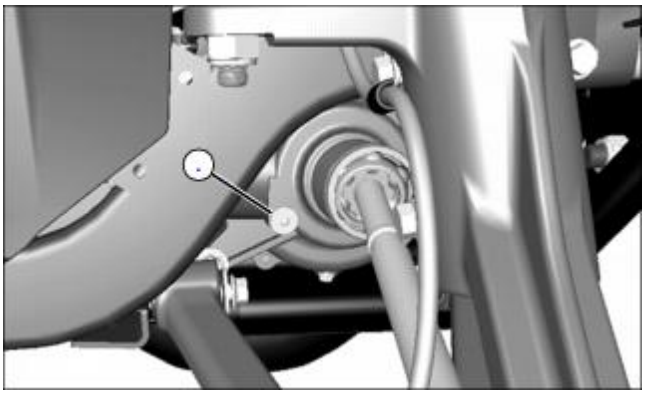

MX35582

Picture Note: Left front wheel removed for clarity.

2. Remove fill plug (A) located on right side of 4WD front differential.

3. Oil should be level with the bottom of the fill port. If oil level is low:

a. Add oil through fill port until level is correct.

b. Install and tighten fill plug to 11 - 40 N•m (8 - 30 lb-ft).

Changing 4WD Front Differential Oil

NOTE: It may be necessary to remove front skid plate to access drain plug.

1. Operate machine to warm 4WD front differential oil.

2. Park machine safely. (See Parking Safely in the SAFETY section.)

IMPORTANT: Avoid damage! Dirt and debris in oil may cause damage to the 4WD differential. Clean area around opening before removing plug.

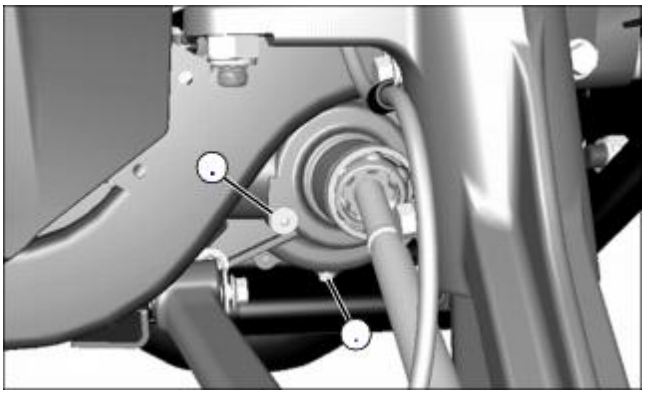

MX35582

Picture Note: Left front wheel removed for clarity.

3. Position drain pan under 4WD front differential drain plug (A) at bottom of housing.

4. Remove fill plug (B) located on right side of 4WD front differential.

5. Remove 4WD front differential drain plug (A) and allow oil to drain.

6. Check washer on drain plug. Replace if missing or in poor condition.

7. Install and tighten drain plug to 7-14 N•m (5-10 lb-ft) after all oil has drained.

8. Add approximately 150 ML (5 oz) of oil until the level is even with the bottom of the fill port.

9. Install and tighten fill plug to 11-40 N•m (8-30 lb-ft).

10. Check 4WD front differential oil level again after the first several hours of operation.

Checking Transaxle Oil Level

IMPORTANT: Avoid damage! Hot hydraulic oil will expand and show incorrect oil level. Check oil level:

• When oil is cold.

• With engine not running.

1. Park the vehicle safely. (See Parking Safely in the SAFETY section.)

2. Raise and secure cargo box.

IMPORTANT: Avoid damage! Dirt and debris in oil may cause damage to the transaxle. Clean area around opening before removing dipstick.

MX31029

3. Remove dipstick (A) located on the top of the transaxle housing. Wipe dipstick clean.

4. Check oil level by setting dipstick on threads in transaxle case, then removing and checking oil level.

5. Add oil as needed through the dipstick fill hole.

6. Install and tighten dipstick.

7. Lower the cargo box.

Changing Transaxle Oil

1. Park the vehicle safely. (See Parking Safely in the SAFETY section.)

2. Raise and secure cargo box.

IMPORTANT: Avoid damage! Dirt and debris in oil may cause damage to the transaxle. Clean area around opening before removing dipstick.

MX31028

3. Position drain pan under transaxle drain plug (A).

4. Remove plug and drain oil.

5. Check washer on drain plug. Replace if missing or in poor condition.

6. Install and tighten drain plug to 44 - 54 N•m (32.5 - 39.9 lb-ft).

7. Remove dipstick located on top of transaxle housing. Wipe dipstick clean.

8. Add approximately 4.0 L (4.2 qt) of oil.

9. Check oil level by setting dipstick on threads in transaxle case, then removing and checking oil level.

10. Wait for two minutes then check oil level. Add oil if necessary.

11. Install dipstick and tighten.

12. Lower the cargo box.

Checking Drive Belt

c CAUTION: Avoid injury! Rotating parts can catch fingers, loose clothing, or long hair. Wait for engine and all moving parts to stop before leaving operator’s station to adjust or service machine.

1. Park the vehicle safely. (See Parking Safely in the SAFETY section.)

2. Raise and secure cargo box.

3. HPX Trail Gator 4x4: Remove clutch enclosure cover.

4. Rotate and inspect belt for wear or damage.

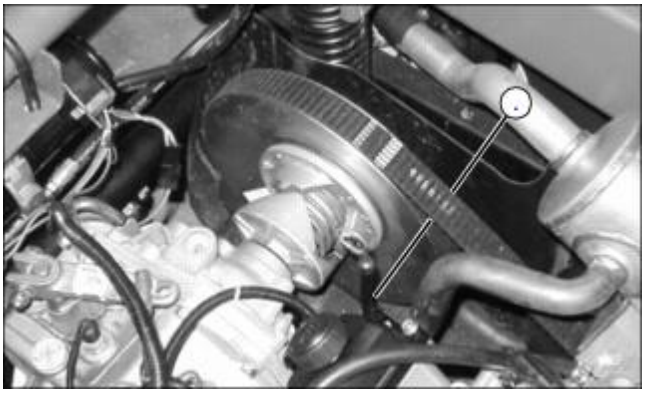

MX31031

5. Measure the top surface of the belt width at (A). Dimension should be a minimum of 29 mm (1.1 in.).

6. Replace belt if worn beyond limit.

7. HPX Trail Gator 4x4: Install clutch enclosure cover.

8. Lower the cargo box.

Replacing Drive Belt

c CAUTION: Avoid injury! Rotating parts can catch fingers, loose clothing, or long hair. Wait for engine and all moving parts to stop before leaving operator’s station to adjust or service machine.

1. Park the vehicle safely. (See Parking Safely in the SAFETY section.)

2. Raise and secure cargo box.

3. HPX Trail Gator 4x4: Remove clutch enclosure cover.

MX31030

4. Route the belt over pulley (A) of the driven clutch. Rotating the driven pulley will aid in removing the belt.

5. Route belt over drive pulley (B) to remove.

6. Install new belt by routing over drive pulley and then over the driven clutch pulley.

7. HPX Trail Gator 4x4: Install clutch enclosure cover.

8. Lower the cargo box.

Checking Secondary Driven Clutch Buttons

1. Park the vehicle safely. (See Parking Safely in the SAFETY section.)

2. Raise and secure cargo box.

3. HPX Trail Gator 4x4: Remove clutch enclosure cover.

MX31497

4. HPX Trail Gator 4x4: Remove secondary clutch mounting bolt (A) and washer (B).

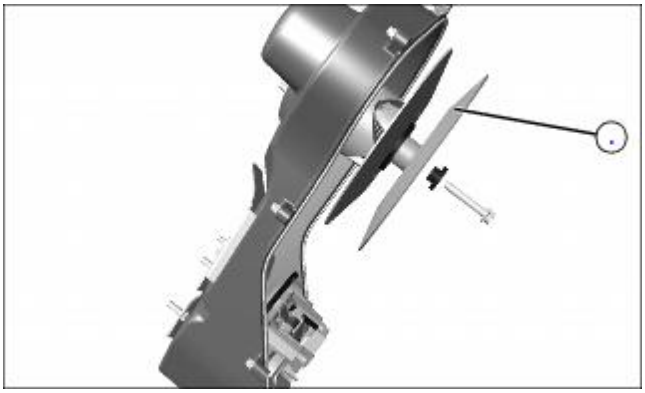

MX31871

5. HPX Trail Gator 4x4: Slide secondary clutch (C) away from transaxle far enough to see clutch buttons.

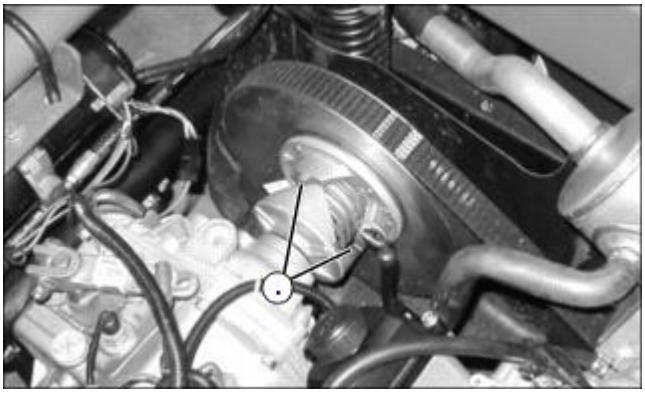

MX31031

6. Check for missing or worn clutch buttons (D).

• There should not be any excessive wear, or metal-to-metal contact.

• If replacement is necessary, see your John Deere dealer.

7. HPX Trail Gator 4x4: Slide secondary clutch in towards transaxle.

8. HPX Trail Gator 4x4: Install secondary clutch mounting bolt and washer and tighten to 70 N•m (52 lb-ft).

9. HPX Trail Gator 4x4: Install clutch enclosure cover.

10. Lower the cargo box.

Cleaning Primary Drive Clutch

IMPORTANT: Avoid damage! Never lubricate any part of the primary drive clutch.

1. Park the vehicle safely. (See Parking Safely in the SAFETY section.)

2. Raise and secure cargo box.

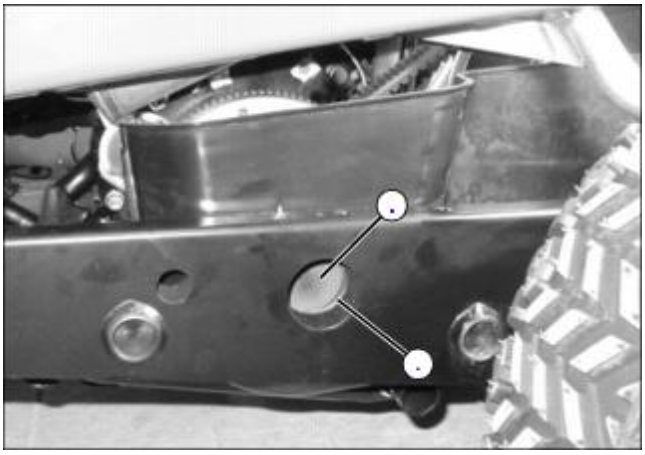

MX31484

3. Through access hole (A), remove clutch cover plug (B).

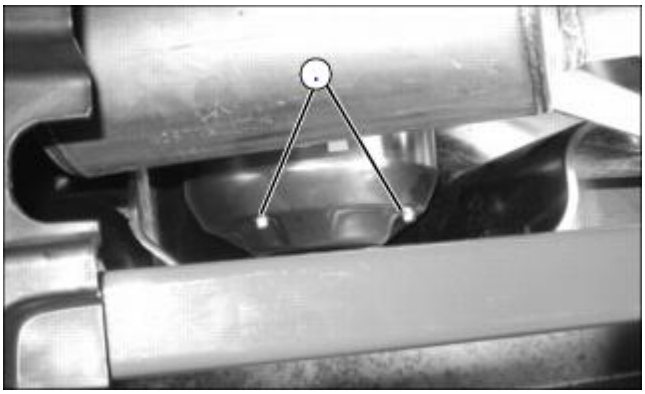

MX31483

4. Remove three screws (C) securing clutch cover. Pull cover away from clutch.

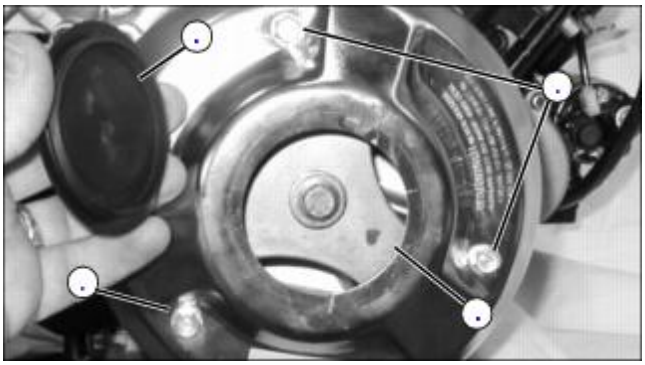

MX31485

Picture Note: Engine removed for clarity. Engine does not need to be removed to clean clutch.

5. Through access hole (D), use compressed air to blow dust and debris out of clutch. Also blow dust and debris out from underneath the belt along the main shaft.

6. Install clutch cover and tighten screws (C) to 8 - 11 N•m (6 - 8 lb-ft).

7. Install clutch cover plug (B).

8. Lower the cargo box.

Copyright © 1996-2009 Deere & Company. All Rights Reserved.