Service Transmission

Transaxle Oil

Use the appropriate oil viscosity based on these air temperature ranges. Operating outside of these recommended oil air temperature ranges may cause premature hydrostatic transmission or hydraulic system failures.

IMPORTANT: Avoid damage! Mixing of LOW VISCOSITY HY - GARD™ and HY - GARD™ oils is permitted. DO NOT mix any other oils in this transmission. DO NOT use engine oil or “Type F” (Red) Automatic Transmission Fluid in this transmission.

John Deere J20C HY-GARD™ transmission and hydraulic oil is recommended. John Deere J20D Low Viscosity HY-GARD™ transmission and hydraulic oil may be used, if within the specified temperature range.

Other oils may be used if above recommended John Deere oils are not available, provided they meet one of the following specifications:

• John Deere Standard JDM J20C;

• John Deere Standard JDM J20D.

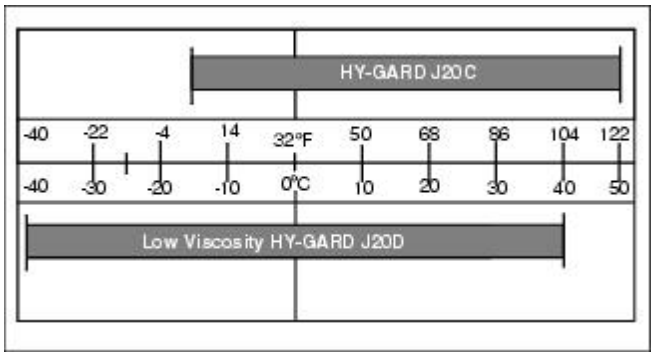

4WD Front Differential Oil

Use the appropriate oil viscosity based on these air temperature ranges. Operating outside of these recommended oil air temperature ranges may cause premature hydrostatic transmission or hydraulic system failures.

IMPORTANT: Avoid damage! Mixing of LOW VISCOSITY HY - GARD™ and HY - GARD™ oils is permitted. DO NOT mix any other oils in this transmission. DO NOT use engine oil or “Type F” (Red) Automatic Transmission Fluid in this transmission.

John Deere J20D Low Viscosity HY-GARD™ transmission and hydraulic oil is recommended.

Other oils may be used if above recommended John Deere oils are not available, provided they meet the following specifications:

• John Deere Standard JDM J20D.

Checking 4WD Front Differential Oil Level

1. Park machine safely. (See Parking Safely in the SAFETY section.) Allow machine to cool down for at least one hour.

IMPORTANT: Avoid damage! Dirt and debris in oil may cause damage to the 4WD differential. Clean area around opening before removing plug.

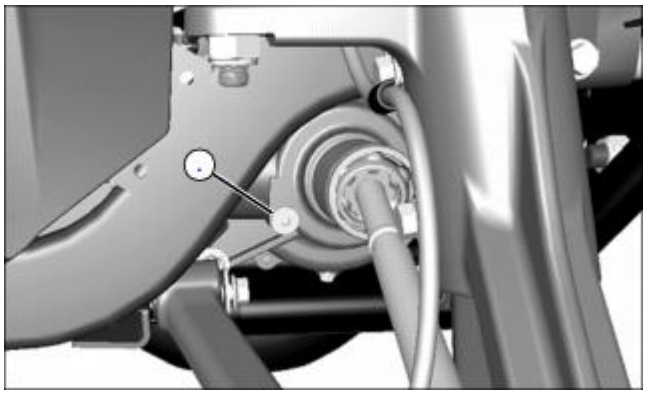

MX35582

Picture Note: Left front wheel removed for clarity.

2. Remove fill plug (A) located on right side of 4WD front differential.

3. Oil should be level with the bottom of the fill port. If oil level is low:

a. Add oil through fill port until level is correct.

b. Install and tighten fill plug to 11 - 40 N•m (8 - 30 lb-ft).

Changing 4WD Front Differential Oil

NOTE: It may be necessary to remove front skid plate to access drain plug.

1. Operate machine to warm 4WD front differential oil.

2. Park machine safely. (See Parking Safely in the SAFETY section.)

IMPORTANT: Avoid damage! Dirt and debris in oil may cause damage to the 4WD differential. Clean area around opening before removing plug.

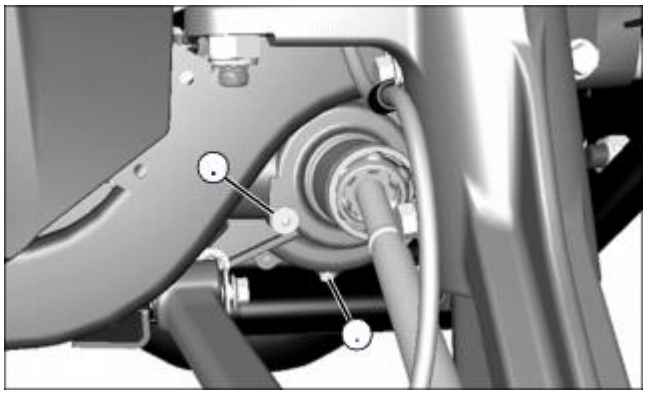

MX35582

Picture Note: Left front wheel removed for clarity.

3. Position drain pan under 4WD front differential drain plug (A) at bottom of housing.

4. Remove fill plug (B) located on right side of 4WD front differential.

5. Remove 4WD front differential drain plug (A) and allow oil to drain.

6. Check washer on drain plug. Replace if missing or in poor condition.

7. Install and tighten drain plug to 7-14 N•m (5-10 lb-ft) after all oil has drained.

8. Add approximately 150 ML (5 oz) of oil until the level is even with the bottom of the fill port.

9. Install and tighten fill plug to 11-40 N•m (8-30 lb-ft).

10. Check 4WD front differential oil level again after the first several hours of operation.

Checking Transaxle Oil Level

IMPORTANT: Avoid damage! Hot hydraulic oil will expand and show incorrect oil level. Check oil level:

• When oil is cold.

• With engine not running.

1. Park the vehicle safely. (See Parking Safely in the SAFETY section.)

2. Raise and secure cargo box.

IMPORTANT: Avoid damage! Dirt and debris in oil may cause damage to the transaxle. Clean area around opening before removing dipstick.

MX31029

3. Remove dipstick (A) located on the top of the transaxle housing. Wipe dipstick clean.

4. Check oil level by setting dipstick on threads in transaxle case, then removing and checking oil level.

5. Add oil as needed through the dipstick fill hole.

6. Install and tighten dipstick.

7. Lower the cargo box.

Changing Transaxle Oil

1. Park the vehicle safely. (See Parking Safely in the SAFETY section.)

2. Raise and secure cargo box.

IMPORTANT: Avoid damage! Dirt and debris in oil may cause damage to the transaxle. Clean area around opening before removing dipstick.

MX31028

3. Position drain pan under transaxle drain plug (A).

4. Remove plug and drain oil.

5. Check washer on drain plug. Replace if missing or in poor condition.

6. Install and tighten drain plug to 44 - 54 N•m (32.5 - 39.9 lb-ft).

7. Remove dipstick located on top of transaxle housing. Wipe dipstick clean.

8. Add approximately 4.0 L (4.2 qt) of oil.

9. Check oil level by setting dipstick on threads in transaxle case, then removing and checking oil level.

10. Wait for two minutes then check oil level. Add oil if necessary.

11. Install dipstick and tighten.

12. Lower the cargo box.

Checking Drive Belt

c CAUTION: Avoid injury! Rotating parts can catch fingers, loose clothing, or long hair. Wait for engine and all moving parts to stop before leaving operator’s station to adjust or service machine.

1. Park the vehicle safely. (See Parking Safely in the SAFETY section.)

2. Raise and secure cargo box.

3. HPX Trail Gator 4x4: Remove clutch enclosure cover.

4. Rotate and inspect belt for wear or damage.

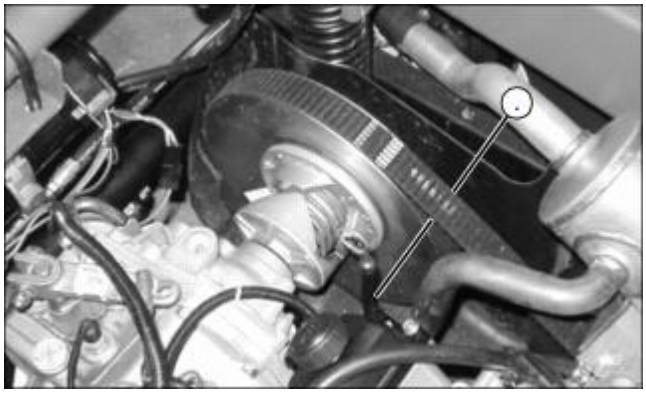

MX31031

5. Measure the top surface of the belt width at (A). Dimension should be a minimum of 29 mm (1.1 in.).

6. Replace belt if worn beyond limit.

7. HPX Trail Gator 4x4: Install clutch enclosure cover.

8. Lower the cargo box.

Replacing Drive Belt

c CAUTION: Avoid injury! Rotating parts can catch fingers, loose clothing, or long hair. Wait for engine and all moving parts to stop before leaving operator's station to adjust or service machine.

1. Park the vehicle safely. (See Parking Safely in the SAFETY section.)

2. Raise and secure cargo box.

3. HPX Trail Gator 4x4: Remove clutch enclosure cover.

MX31030

4. Route the belt over pulley (A) of the driven clutch. Rotating the driven pulley will aid in removing the belt.

5. Route belt over drive pulley (B) to remove.

6. Install new belt by routing over drive pulley and then over the driven clutch pulley.

7. HPX Trail Gator 4x4: Install clutch enclosure cover.

8. Lower the cargo box.

Checking Secondary Driven Clutch Buttons

1. Park the vehicle safely. (See Parking Safely in the SAFETY section.)

2. Raise and secure cargo box.

3. HPX Trail Gator 4x4: Remove clutch enclosure cover.

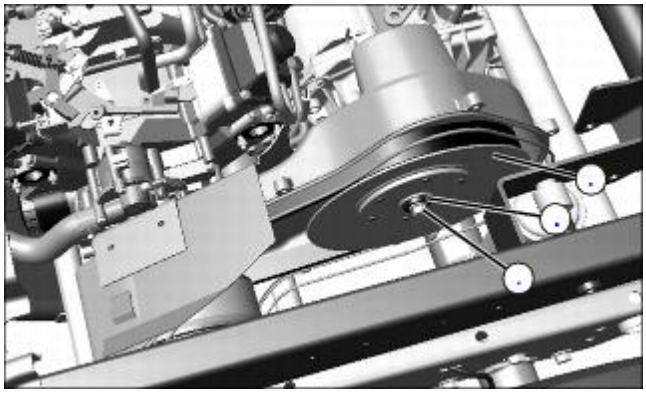

MX31497

4. HPX Trail Gator 4x4: Remove secondary clutch mounting bolt (A) and washer (B).

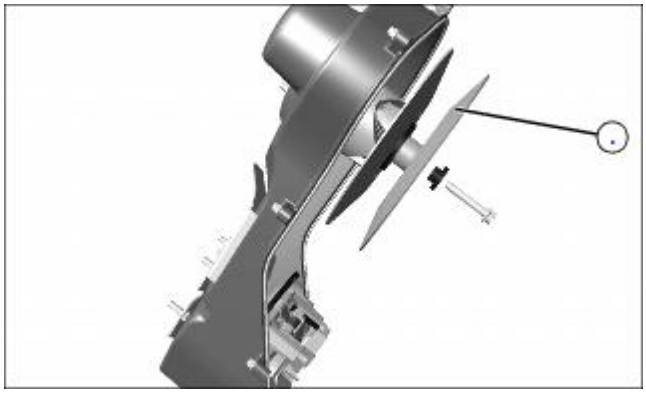

MX31871

5. HPX Trail Gator 4x4: Slide secondary clutch (C) away from transaxle far enough to see clutch buttons.

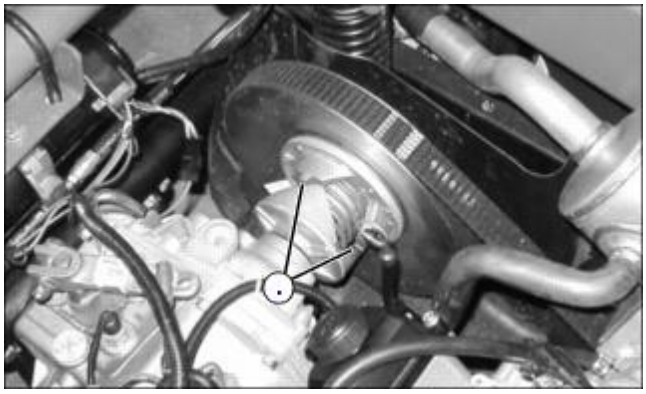

MX31031

6. Check for missing or worn clutch buttons (D).

• There should not be any excessive wear, or metal-to-metal contact.

• If replacement is necessary, see your John Deere dealer.

7. HPX Trail Gator 4x4: Slide secondary clutch in towards transaxle.

8. HPX Trail Gator 4x4: Install secondary clutch mounting bolt and washer and tighten to 70 N•m (52 lb-ft).

9. HPX Trail Gator 4x4: Install clutch enclosure cover.

10. Lower the cargo box.

Cleaning Primary Drive Clutch

IMPORTANT: Avoid damage! Never lubricate any part of the primary drive clutch.

1. Park the vehicle safely. (See Parking Safely in the SAFETY section.)

2. Raise and secure cargo box.

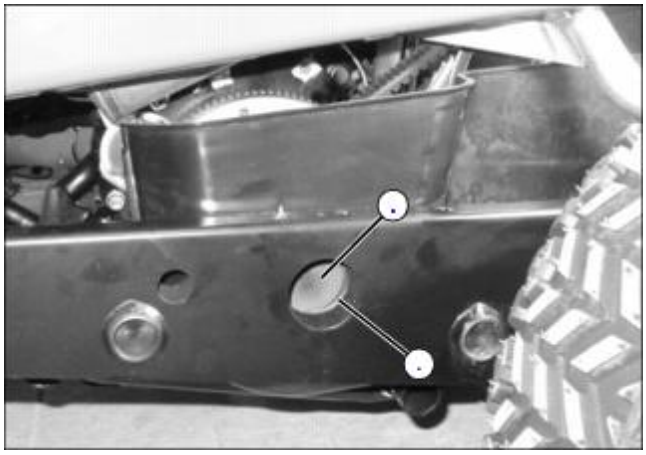

MX31484

3. Through access hole (A), remove clutch cover plug (B).

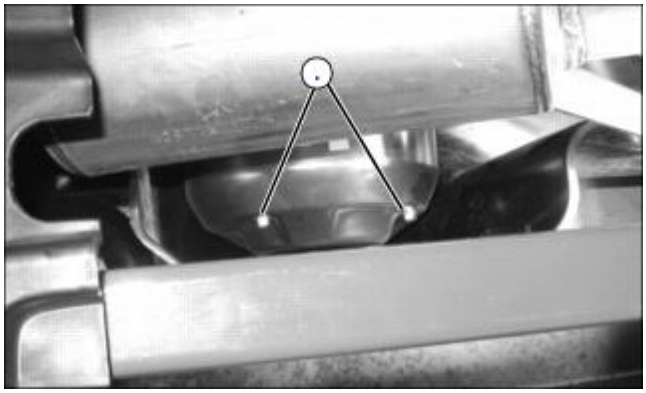

MX31483

4. Remove three screws (C) securing clutch cover. Pull cover away from clutch.

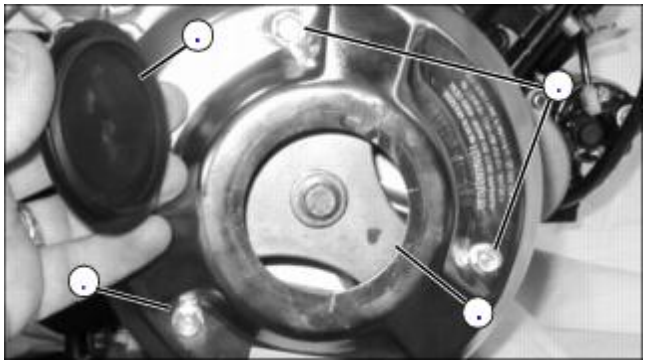

MX31485

Picture Note: Engine removed for clarity. Engine does not need to be removed to clean clutch.

5. Through access hole (D), use compressed air to blow dust and debris out of clutch. Also blow dust and debris out from underneath the belt along the main shaft.

6. Install clutch cover and tighten screws (C) to 8 - 11 N•m (6 - 8 lb-ft).

7. Install clutch cover plug (B).

8. Lower the cargo box.

Copyright © 1996-2009 Deere & Company. All Rights Reserved.