Students please affix one of the self adhesive labels from your sheet of identification labels to this page. Make sure the edges of the label are within the boundaries of this box and that the affixed label does not obscure any other parts of this page. If you do not have a self adhesive identification label, please complete the following information. **Your Name:** _____ *Write your name as it appears on your name badge.* **Your Participant Code:** [ ][ ][■][ ][ ][ ][ ][■][ ][ ] *Write your participant code as it appears on your name badge.*	**Students please do not write or mark within this box.** **Skill Activity Score:_____** **Judge's Initials: _____**

2009 NATIONAL FFA AGRICULTURAL MECHANICS CAREER DEVELOPMENT EVENT
STRUCTURAL SYSTEMS

Please read and follow directions carefully! Use your time wisely!

GENERAL INFORMATION / DIRECTIONS:
Assume you are repairing a part for an irrigation system. While repairing the part you are required to braze weld tubing to plate. The joint must be leakproof. This exercise represents this requisite skill.

PROCEDURES:

1. Safety: Because you are working in a welding area, safety glasses must be worn at all times. Serviceable welding goggles with a protective lens (shade four minimum) as well as leather gloves and long sleeves must be worn while welding.
2. Follow the provided plans to assemble and weld the required piece utilizing the oxy-acetylene braze welding process.
3. Mark your completed assembly and turn it in to a contest official with this sheet.

Activity Score Sheet

Graded Item	Possible	Score
1. Correct assembly	3	_____
2. Bead width	3	_____
3. Bead contour	3	_____
4. Bead uniformity	3	_____
5. Equal bead width on both surfaces	3	_____
6. Tie-in of beads	3	_____
7. Dye penetrant test	9	_____
8. Safety	3	_____
TOTAL POINTS: (Double check point total and enter at top)	30	_____

2009 National Agricultural Mechanics Career Development Event
Structures

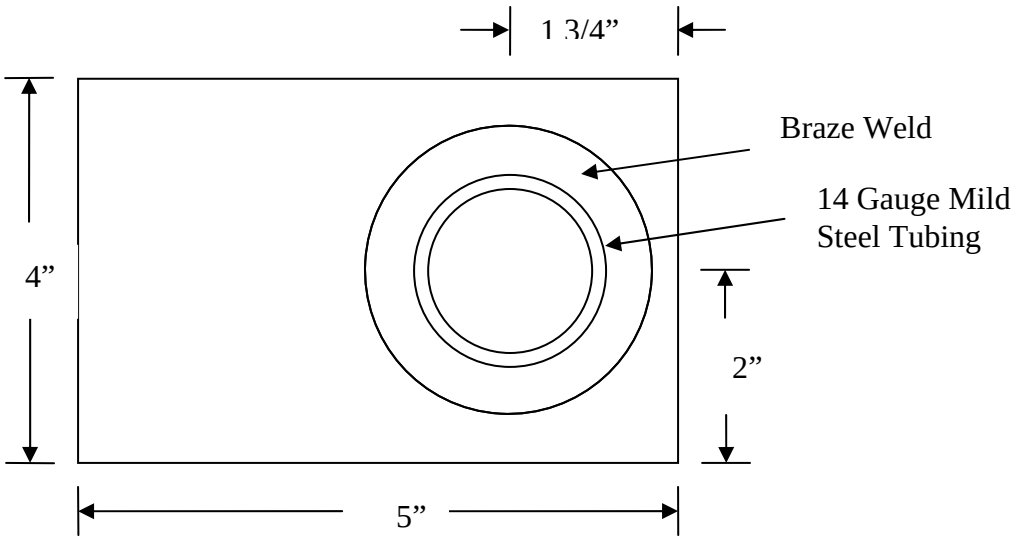

Top View

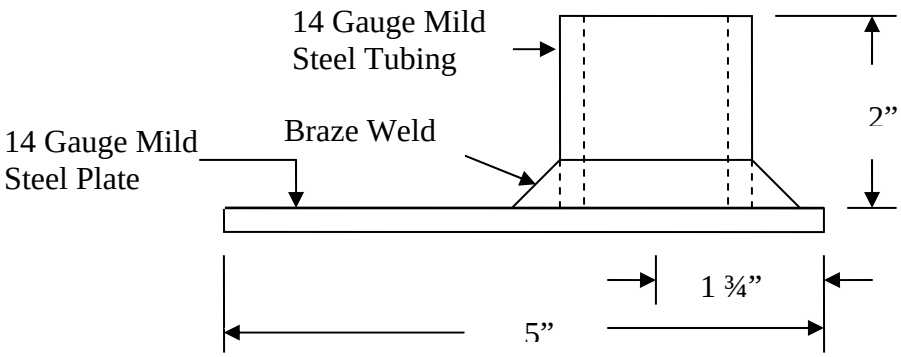

Side View