2008
National FFA Agricultural Mechanics Career Development Event

Table of Contents

1. Team Activity
2. Written Examination
3. Energy Systems Activity
4. Machinery and Equipment Systems Activity
5. Industry and Marketing Systems Activity
6. Environment and Natural Resources Systems Activity
7. Structural Systems Activity
8. Web Site

2008 NATIONAL AGRICULTURAL MECHANICS CAREER DEVELOPMENT EVENT (CDE)

TEAM ACTIVITY

Team Problem

Bottlejack Information

Formulas

Micrometer Information

Hydraulic Information

Answer Sheet

2008 NATIONAL FFA AGRICULTURAL MECHANICS CDE TEAM ACTIVITY

TEAM PROBLEM

HOME

PROBLEM:

A producer has contacted you with a hydraulic problem. He has acquired a load of bottle jacks and wants to be sure they are strong enough to support the weight of his trailers. He does not know the tonnage rating on the jacks nor does he know the elevation limitations of the jacks. He has asked you to find the tonnage ratings, elevation limits, and other information

Read through each of the questions and follow the directions to solve the problem to provide a response to the producer's problem. Use the enclosed files to locate the correct formulas to help you solve the problems.

TOOLS AND MATERIALS:

Check your station to be sure you have the following tools & materials:

1. Bottlejack
2. Micrometer or dial caliper
3. Tape measure
4. Needle-nose pliers
5. Adjustable end wrench
6. Measuring cup
7. Aluminum catch tray
8. Calculator

INSTRUCTIONS

1. Read all instructions and the Answer Sheet before you begin.
2. Use the Hydraulic Readings for reference as needed. A diagram of the bottlejack is included.
3. Measure the maximum and minimum height of the bottlejack.
4. Measure the length of the handle.
5. Remove the cotter pins connecting the plunger to the handle and the base.
6. Carefully, remove the tops of both the piston and plunger.
7. Pour the hydraulic fluid into the measuring cup.
8. Take your readings using your micrometer or dial caliper.
9. Record your measurements.
10. Use the formulas in this disk to make the appropriate calculations. Use 60.0 lbs of force on the pump piston in your calculations.
11. Be sure to place your responses in the correct boxes on the Answer Sheet.
12. Carefully, re-assemble your bottlejack.
13. Replace the fluid in the bottlejack by removing the rubber plug in the back.
14. Print out your Answer Sheet. Be sure you include the name of your State on the top of the Answer Sheet.
15. Be sure all of the tools and materials are on the table and wait to be dismissed by event personnel.

2008 NATIONAL FFA AGRICULTURAL MECHANICS CDE TEAM ACTIVITY

BOTTLE JACK INFORMATION

HOME

ASSEMBLY DIAGRAM

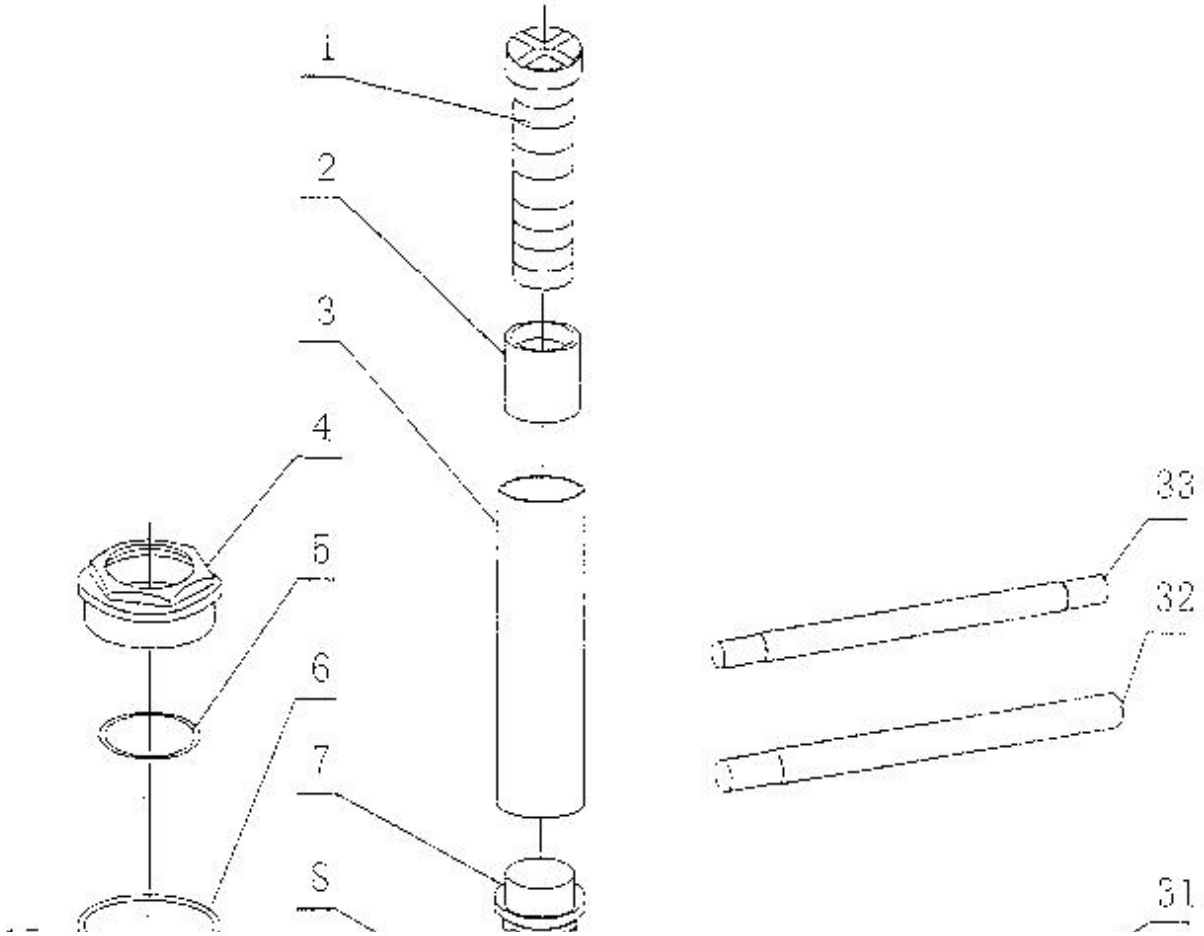

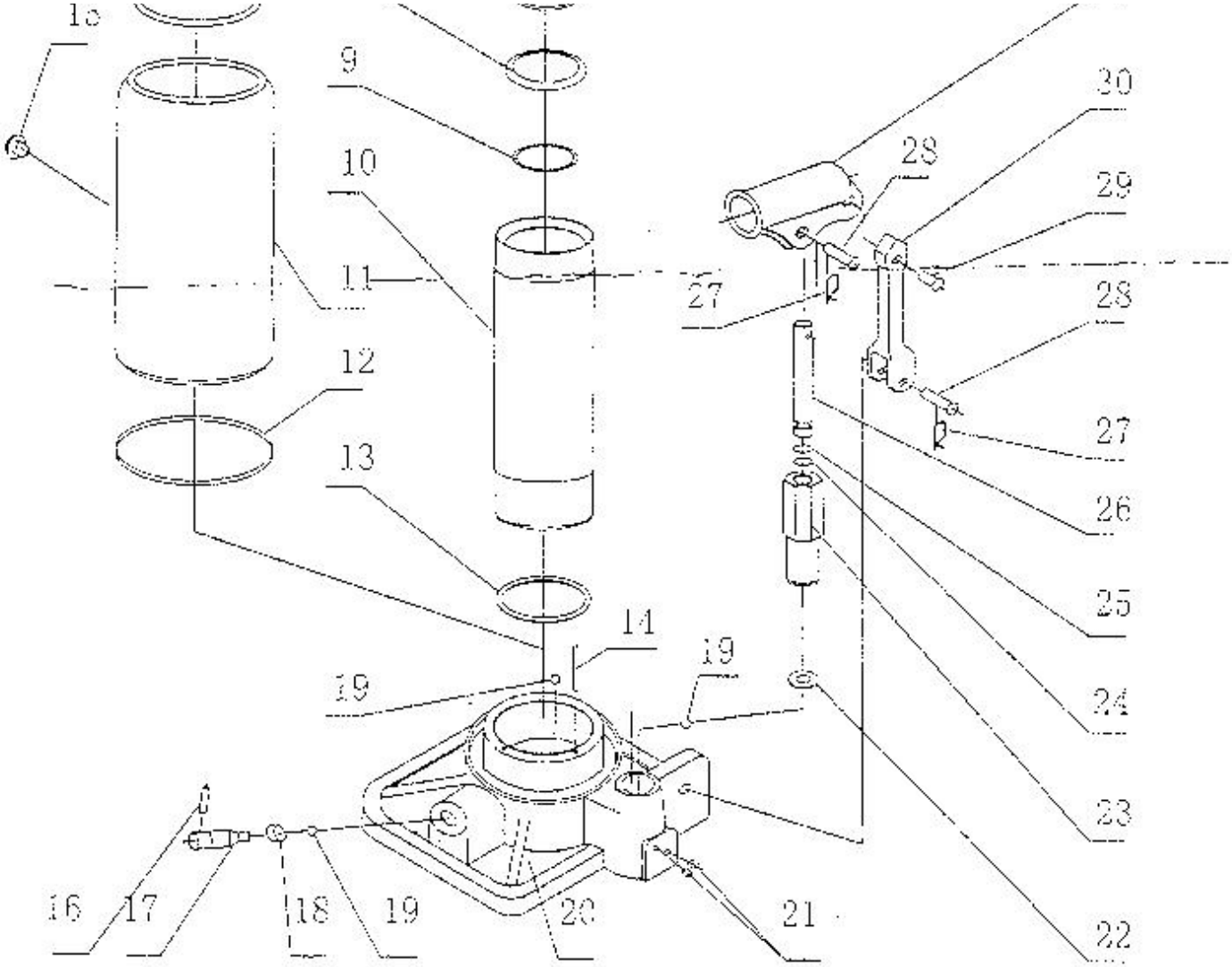

SPECIFICATIONS

PARTS LIST

Part	Description	Q'ty
1	Adjust Screw	1
2	Adjust Screw Socket	1
3	Piston Rod	1
4	Nut	1
5	O-Ring (Nut)	1
6	Seal of Nut	1
7	Piston	1
8	Bowl Washer	1
9	O-Ring (Pistion)	1
10	Cylinder	1
11	Reservoir	1
12	Sealing Part (Trapeziform)	1
13	Base Plate Washer	1
14	Oil Filler	1
15	Oil Fill Plug	1
16	Pin D4x24	1
17	Release Valve	1

Part	Description	Q'ty
18	Release Valve Seal	1
19	Ball 6mm	3
20	Base	1
21	Bolt	3
22	Washer (Pump)	1
23	Pump	1
24	O-Ring (Plunger)	1
25	Back Ring	1
26	Plunger	1
27	Spring Bolt	2
28	Pin	2
29	Short Pin	1
30	Link Plate	2
31	Swing Socket	1
32	Handle (Front)	1
33	Handle (Back)	1

LIMITED 90 DAY WARRANTY

2008 NATIONAL FFA AGRICULTURAL MECHANICS CDE TEAM ACTIVITY

FORMULAS

HOME

FORMULAS

Click on the link below for a list of formulas to help you solve the team activity problem

Formula Descriptions

HYDRAULIC FORMULAS

a. Lift force = oil pressure (psi) x area cylinder (in^2)

b. Oil pressure in cylinder = force of piston / area

c. Force on pump piston = force on lever x mechanical advantage

d. Area of a cylinder = $\frac{\pi \times \text{diam}^2}{4}$

e. Mechanical advantage = $\frac{\text{Length of handle}}{\text{Length of lever}}$

f. Lever force = $\frac{(\text{Weight (lbs)} \times \text{Length of fulcrum point (ft.)})}{\text{Length of lift handle (ft.)}}$

2008 NATIONAL FFA AGRICULTURAL MECHANICS CDE TEAM ACTIVITY

HYDRAULIC READINGS

HOME

Use these reference sources for information to solve the team activity problem.

- Hydraulics Reading 1
- Hydraulics Reading 2
- Hydraulics Reading 3
- Bottle Jack Diagram

2008 NATIONAL FFA AGRICULTURAL MECHANICS CDE TEAM ACTIVITY

MICROMETER INFORMATION

HOME

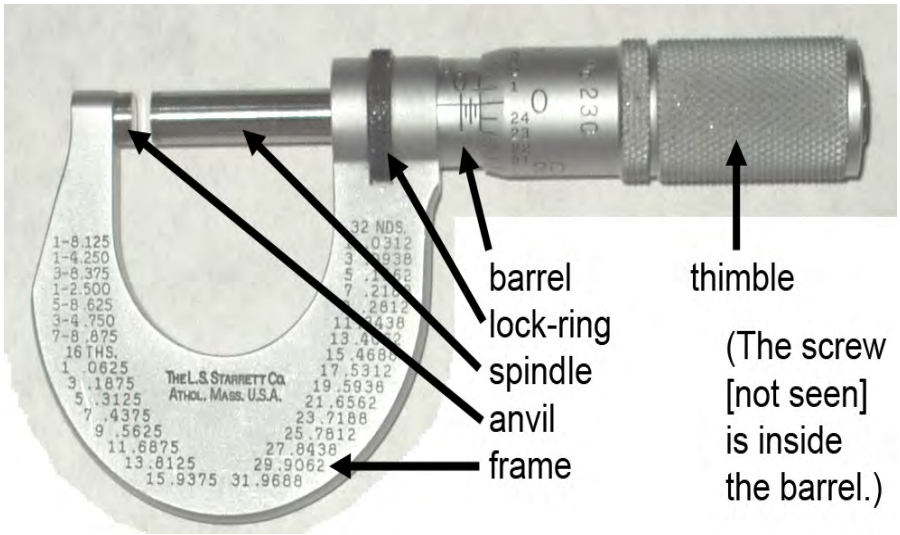

How To Read A Micrometer

• **Start by verifying zero with the jaws closed.** • **Turn the ratcheting knob on the end till it clicks.** • **If it isn't zero, adjust**	
• **Carefully open and close the jaws around the specimen using the ratcheting knob till it clicks.** • ***Read it!*** • **First, identify that it's between 3 and 4 (0.3)** • **Next, see that it's just past the quarter mark (0.325)** • **Also see that the dial reads between 4 and 5, so add 0.004 to the 0.325 = (0.329)**	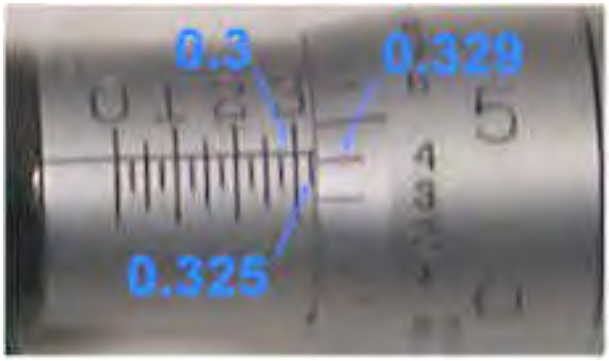
• **To get the ten-thousandths place, read the vernier.** • **Look for the line that best aligns with a mark on the dial - in this case 4.** • **So add 0.0004 for a final reading of 0.3294**	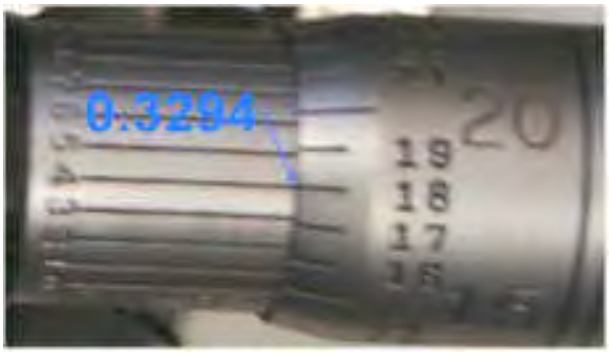

How to Read a Micrometer - 2

Reading a micrometer takes practice.

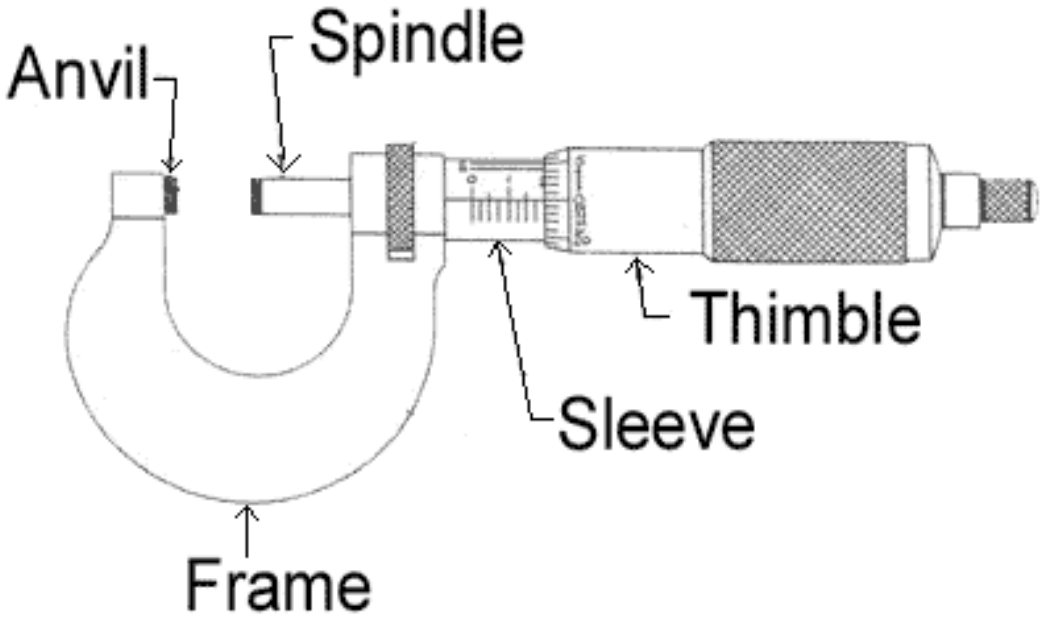

To learn to read the mike you need to understand the **Thimble** and the **Sleeve**.

Here we are going to learn to read the micrometer by figuring out the markings on the Thimble and the Sleeve.

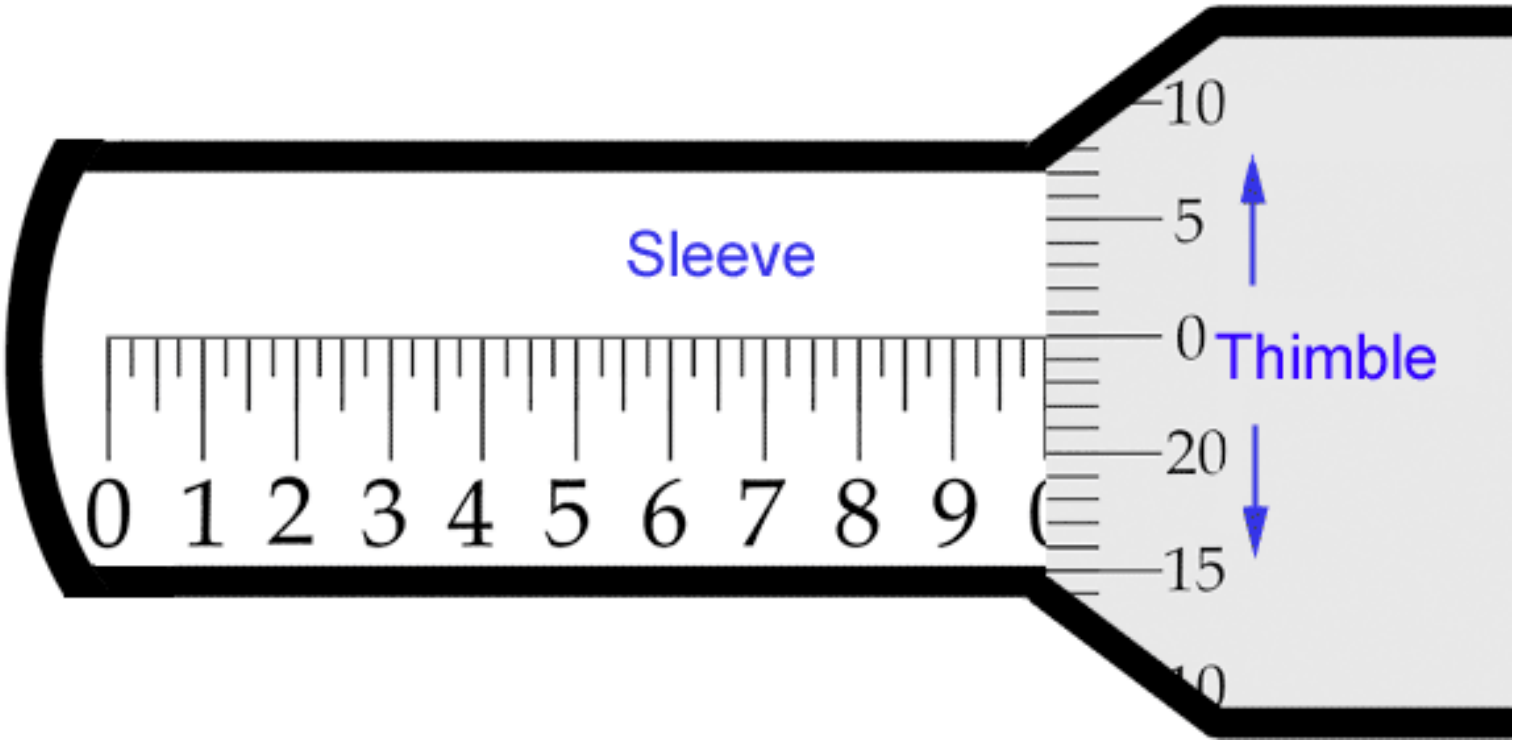

The Sleeve does not move. It looks like a ruler with ten numbers. The space between each number is divided into quarters. As the Thimble rotates around this Sleeve it covers up, or reveals the numbers marked on the Sleeve.

It is easy to read a micrometer if you think of the markings on the Sleeve as dollars and quarters.

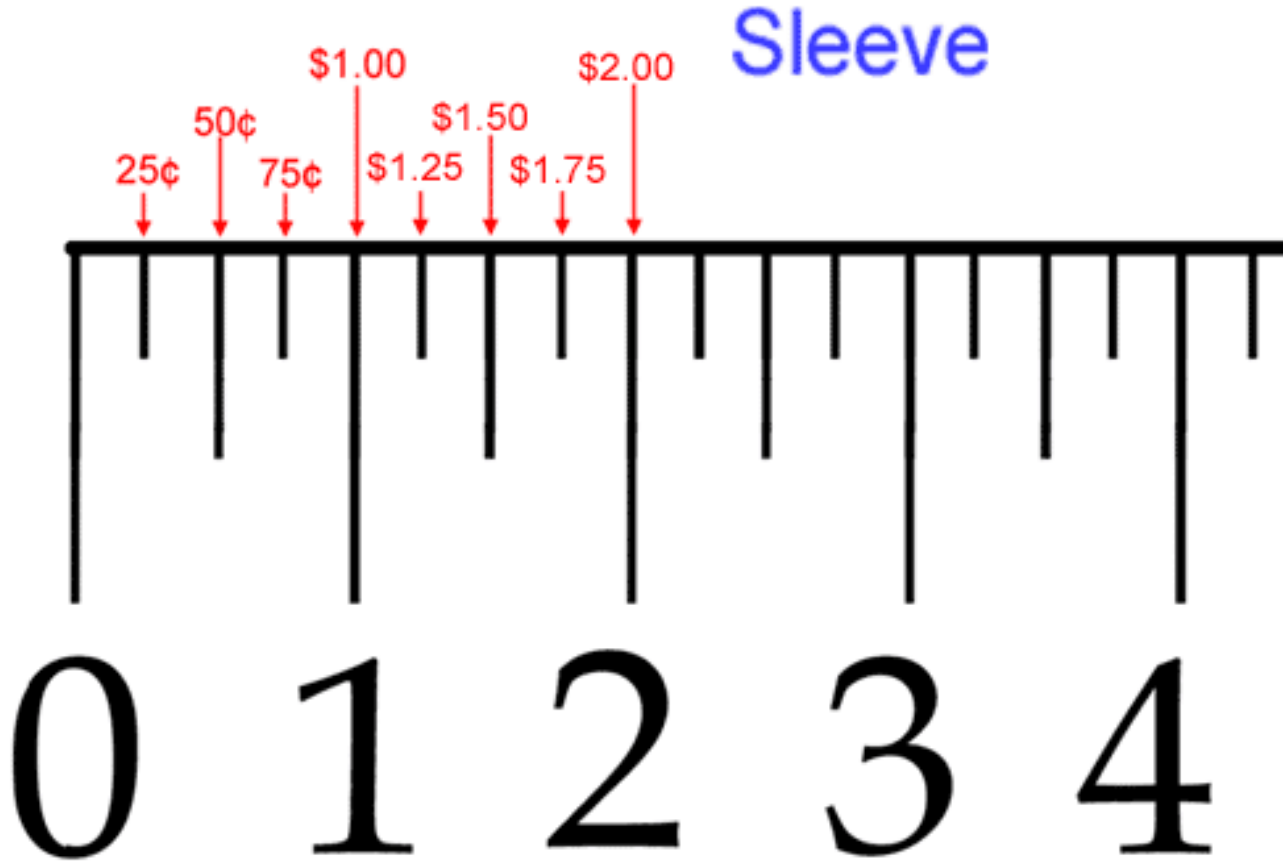
Sleeve
$1.00
$2.00
50¢
$1.50
25¢
75¢
$1.25
$1.75
0 1 2 3 4

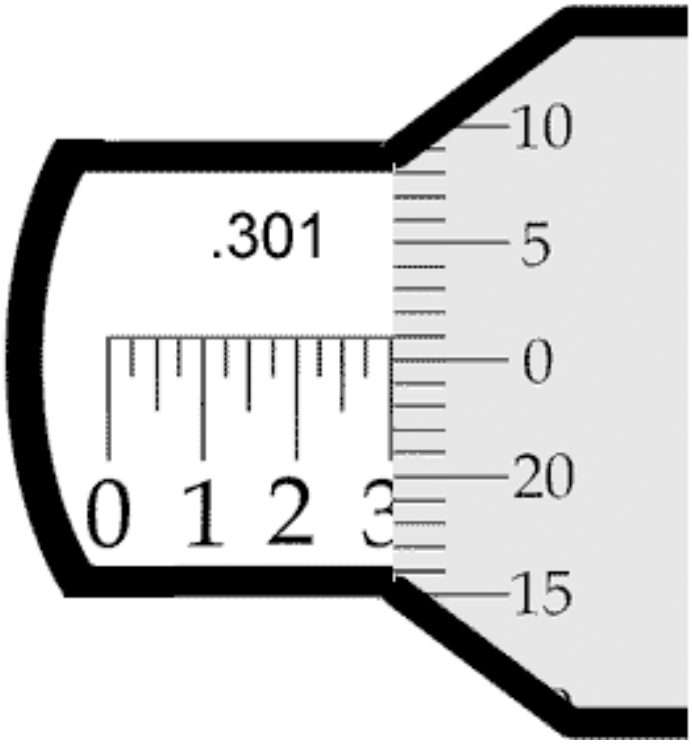
.301
0 1 2 3
10
5
0
20
15

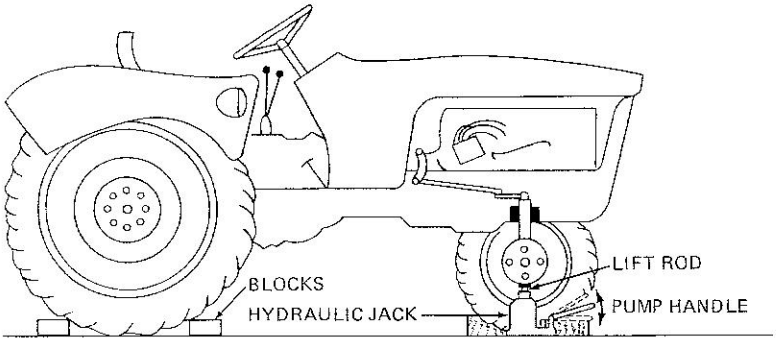

Fig. 9-8. A safer, more efficient method for raising the tractor wheel is to use a hydraulic jack.

By using the hydraulic jack the mechanical advantage obtained was 4242 lb of force output from 60 lb of force input, or approximately 71:1 ($^{4242}/_{60}$). Thus, the serviceperson would need to apply approximately 10.2 lb [4.63 kg] of force ($^{720}/_{71}$ lb) on the handle to lift the 720-lb [327-kg] tractor axle (Fig. 9-8).

HYDROSTATIC POWER COMPONENTS

The hydraulic jack (Fig. 9-9) illustrates the basic parts required of a hydrostatic hydraulic system. These parts include (1) a reservoir to hold a supply of oil, (2) a pump capable of moving the fluid (oil) in the system against a resistance, (3) control valves to direct the flow of liquid, and (4) a device such as a hydraulic cylinder (ram) or hydraulic motor to be operated by the fluid.

Hydraulic Pump

The heart of a hydrostatic power transmission system is the *positive-displacement* pump. A pump for a hydrostatic system will displace (move) a certain quantity of oil in a stated period of time within the working pressure of the system. For example, a positive-displacement pump may be rated in gallons per minute [liters per minute] at a pressure of 1000 to 5000 psi [6900 to 34,500 kPa]. It is important to remember that a pump does not itself develop pressure. A pump creates movement of the liquid (oil). The pressure created is the result of resistance to the flow of liquid from the pump.

To produce a steady movement of the hydrostatic power transmission system, the pump must be capable of producing a continuous flow of liquid. The piston pump illustrated in Fig. 9-9 provides "positive displacement"; that is, each stroke of the piston displaces a given volume of oil. However, the up-and-down movement of the piston would produce a pulsating flow of oil, and the lift ram would move in jerks. Modern hydraulic systems use valved positive-displacement pumps to provide a constant flow of oil and smooth piston action.

Control System

A system of valves is used to control the flow of fluid for the hydrostatic system. Valves not only are used to control the amount and direction of the fluid,

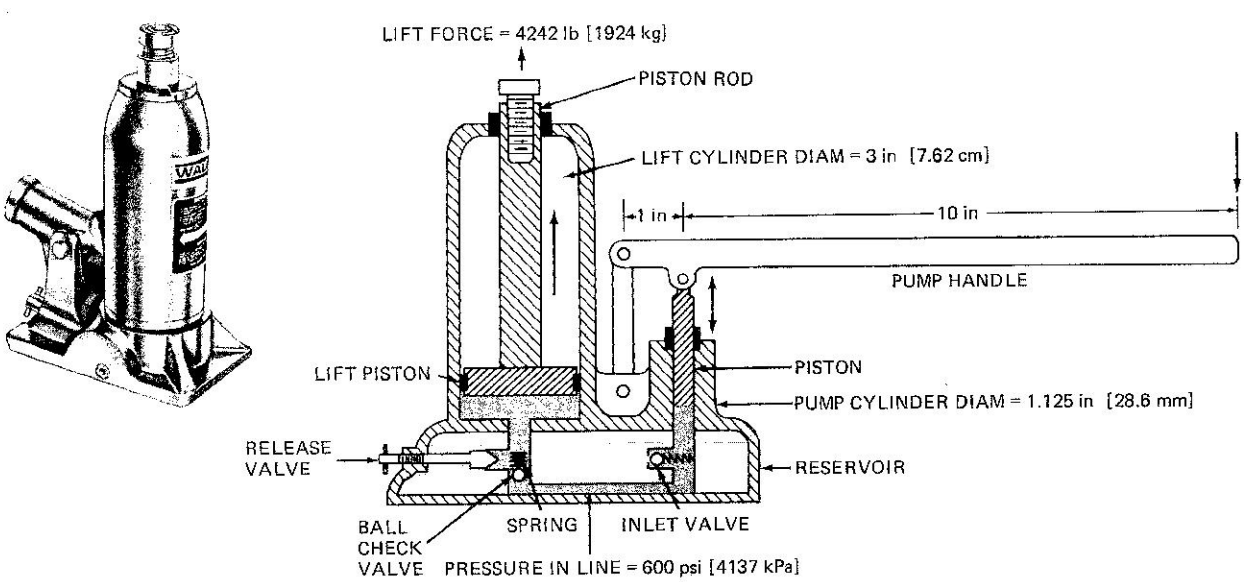

Fig. 9-9. Cross section of a hydraulic jack. A force of 60 lb [27.2 kg] on the pump handle is capable of developing a ram lift force of 4242 lb [1924 kg]. (*Walker Mfg.*)

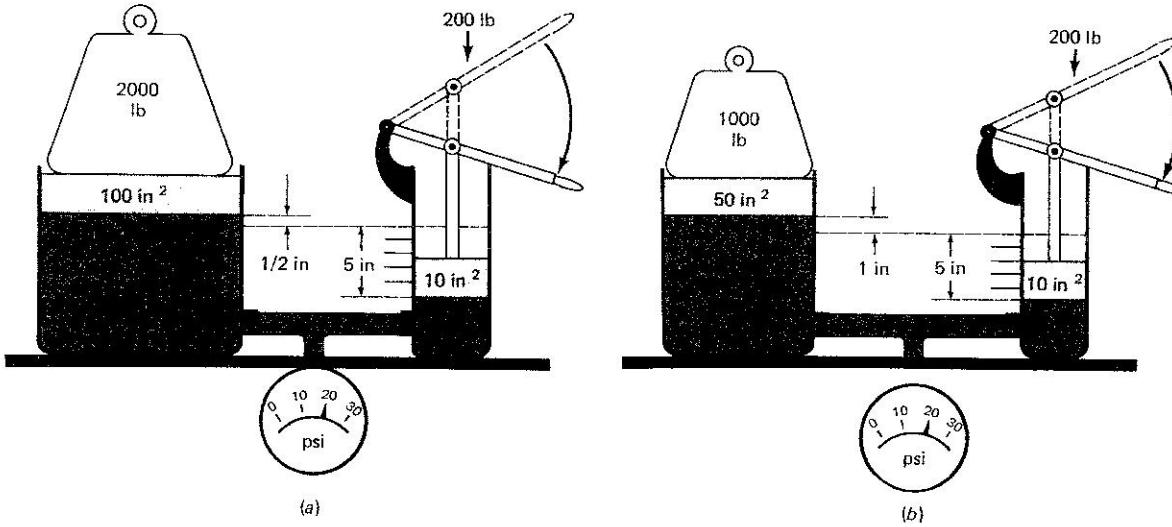

Fig. 9-6. Pressure multiplied by the area of the piston equals the load-carrying capacity. (*a*) A pressure of 20 psi acts against 100 in² and supports 2000 lb. (*b*) The same pressure acting against 50 in² supports 1000 lb, but lifts the weight twice as far (½ in to 1 in).

raises the axle. The mechanical construction of a hydraulic jack is illustrated in Fig. 9-9. Note that the downward force on the "pump" handle forces the piston of the pump downward in its cylinder. The action forces oil out of the pump cylinder opening past the ball check valve. The amount of oil displaced by the pump and the force exerted on the oil in the pump cylinder is as follows:

$$\text{Mechanical advantage of pump handle} = \frac{\text{10-in handle}}{\text{1-in lever}} = 10:1$$

$$\text{Force on pump piston} = \text{force on lever} \times \text{mechanical advantage} = 60\text{ lb} \times 10 = 600\text{ lb [272.2 kg]}$$

$$\text{Oil pressure in cylinder} = \text{force of piston} \div \text{area}$$

where

$$\text{Force} = 600\text{ lb [272.2 kg]}$$

$$\text{Diameter (diam) of pump cylinder} = 1.125\text{ in [28.6 mm]}$$

$$\text{Area of pump cylinder} = \frac{\pi \times \text{diam}^2}{4} = \frac{3.1416 \times (1.125\text{ in})^2}{4} = 1.0\text{ in}^2\ [6.45\text{ cm}^2]$$

Thus

$$\text{Oil pressure} = 600\text{ lb} \div 1.0\text{ in}^2 = 600\text{ psi [4137 kPa]}$$

With the pressure release valve in the closed position (needle valve seated), a pressure of 600 psi enters the line connecting the pump to the lift cylinder and distributes an equal pressure to all other parts of the system. The amount of force which the piston (ram) is able to exert is as follows:

$$\text{Lift force} = \text{oil pressure (psi)} \times \text{area cylinder (in}^2\text{)} = 600\text{ psi} \times \frac{\pi \times \text{diam}^2}{4} = 600\text{ psi} \times \frac{3.1416 \times (3\text{ in})^2}{4} = \frac{600\text{ lb}}{\text{in}^2} \times \frac{7.07\text{ in}^2}{1} = 4242\text{ lb [1924 kg]}$$

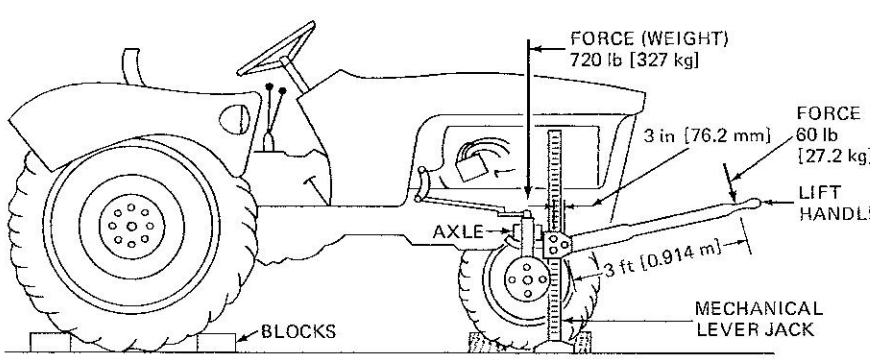

Fig. 9-7. A mechanical lever jack is used to lift the front wheel of a tractor when a flat tire is to be repaired. The lever jack is used to obtain a mechanical advantage of 12:1. Thus, the force required to lift the 720 lb [327 kg] weight of the axle is 60 lb [27.2 kg].

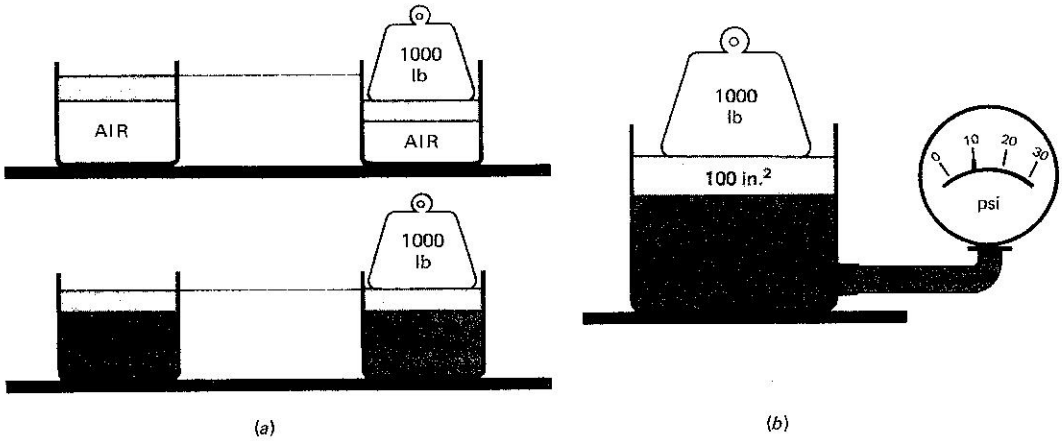

Fig. 9-4. (*a*) Unlike air, liquids cannot be compressed into a smaller volume. (*b*) An applied force, divided by the area of the cylinder, equals the pressure on the liquid.

1000 lb [454 kg]. The load, however, will be moved 1 in [25.4 mm], or twice as far. Therefore,

Volume of oil displaced × area of piston
= movement of lift piston

Hydraulic power also involves a second basic law, called the *law of conservation of energy*. This law states that energy can be neither created nor destroyed. That is, work done, or the output of energy, cannot exceed the input. For example, a mechanical lever jack is used to lift the right front wheel of a tractor in order to repair a flat tire (Fig. 9-7). The lift hook of the jack is placed under the wheel axle, and the handle of the jack is "pumped" up and down to raise the axle. The fulcrum point (the point where the handle of the jack pivots in its support) is 3 in [76.2 mm] from the center line of the jack. The lift handle (the lever to which force is applied to raise the axle) is 3 ft [0.914 meter (m)] in length. If the front wheel axle assembly weighs 720 lb [327 kg], a force of 60 lb [27.2 kg] applied to the lever would raise the wheel assembly as follows:

$$\text{Lever force} = \frac{720 \text{ lb} \times 0.25 \text{ ft}}{3.0 \text{ ft}} = \frac{180 \text{ lb} \cdot \text{ft}}{3.0 \text{ ft}} = 60 \text{ lb } [27.2 \text{ kg}]$$

Hydraulic Jack

Most service centers use a hydraulic *jack* to lif heavy objects such as a tractor. This type of jack provides a more efficient mechanism than the me chanical lever jack method and serves as a good ex ample of the practical application of the principles o hydraulic power previously illustrated.

The piston (ram) of the hydraulic jack is placed under the axle of the tractor. The service worke pumps a short lever on the jack (Fig. 9-8), which

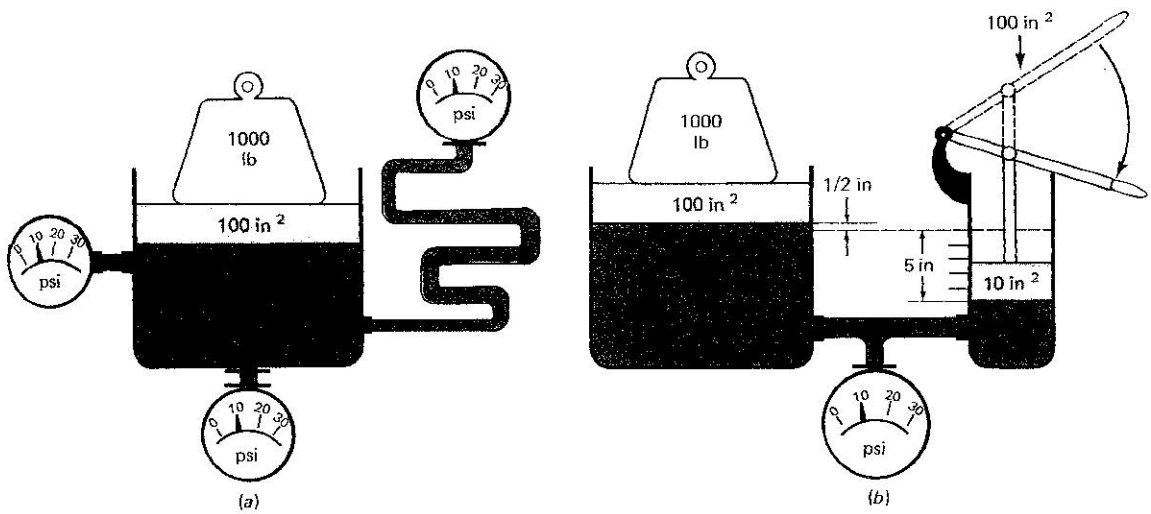

Fig. 9-5. (*a*) Liquids are classified as flexible solids. (*b*) A force of 100 lb divided by the pump cylinder volume of 10 in² equals a force of 10 psi on the fluid. Acting on 100 in², the pressure will support 1000 lb.

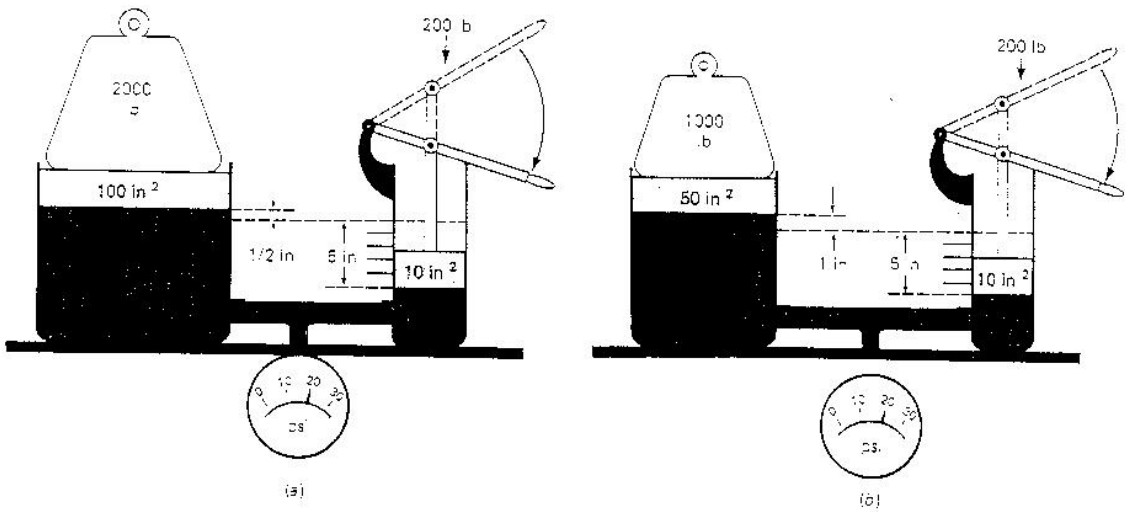

Fig. 9-6. Pressure multiplied by the area of the piston equals the load-carrying capacity. (*a*) A pressure of 20 psi acts against 100 in² and supports 2000 lb. (*b*) The same pressure acting against 50 in² supports 1000 lb, but lifts the weight twice as far (½ in to 1 in).

raises the axle. The mechanical construction of a hydraulic jack is illustrated in Fig. 9-9. Note that the downward force on the "pump" handle forces the piston of the pump downward in its cylinder. The action forces oil out of the pump cylinder opening past the ball check valve. The amount of oil displaced by the pump and the force exerted on the oil in the pump cylinder is as follows:

$$\text{Mechanical advantage of pump handle} = \frac{\text{10-in handle}}{\text{1-in lever}} = 10:1$$

$$\text{Force on pump piston} = \text{force on lever} \times \text{mechanical advantage} = 60\ \text{lb} \times 10 = 600\ \text{lb}\ [272.2\ \text{kg}]$$

$$\text{Oil pressure in cylinder} = \text{force of piston} \div \text{area}$$

where

$$\text{Force} = 600\ \text{lb}\ [272.2\ \text{kg}]$$

$$\text{Diameter (diam) of pump cylinder} = 1.125\ \text{in}\ [28.6\ \text{mm}]$$

$$\text{Area of pump cylinder} = \frac{\pi \times \text{diam}^2}{4} = \frac{3.1416 \times (1.125\ \text{in})^2}{4} = 1.0\ \text{in}^2\ [6.45\ \text{cm}^2]$$

Thus

$$\text{Oil pressure} = 600\ \text{lb} \div 1.0\ \text{in}^2 = 600\ \text{psi}\ [4137\ \text{kPa}]$$

With the pressure release valve in the closed position (needle valve seated), a pressure of 600 psi enters the line connecting the pump to the lift cylinder and distributes an equal pressure to all other parts of the system. The amount of force which the piston (ram) is able to exert is as follows:

$$\text{Lift force} = \text{oil pressure (psi)} \times \text{area cylinder (in}^2\text{)} = 600\ \text{psi} \times \frac{\pi \times \text{diam}^2}{4} = 600\ \text{psi} \times \frac{3.1416 \times (3\ \text{in})^2}{4} = \frac{600\ \text{lb}}{\text{in}^2} \times \frac{7.07\ \text{in}^2}{1} = 4242\ \text{lb}\ [1924\ \text{kg}]$$

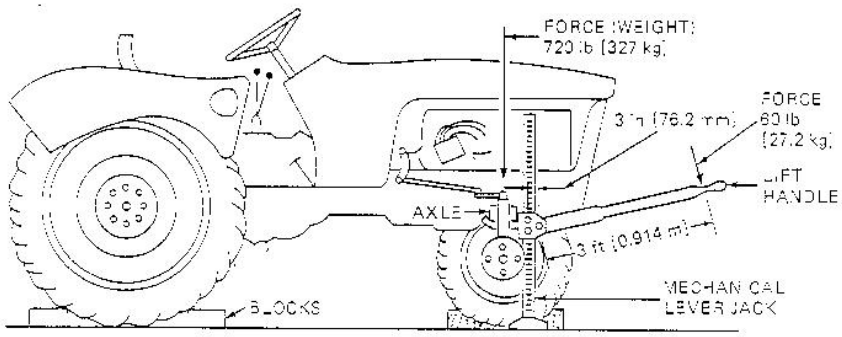

Fig. 9-7. A mechanical lever jack is used to lift the front wheel of a tractor when a flat tire is to be repaired. The lever jack is used to obtain a mechanical advantage of 12:1. Thus, the force required to lift the 720 lb [327 kg] weight of the axle is 60 lb [27.2 kg].

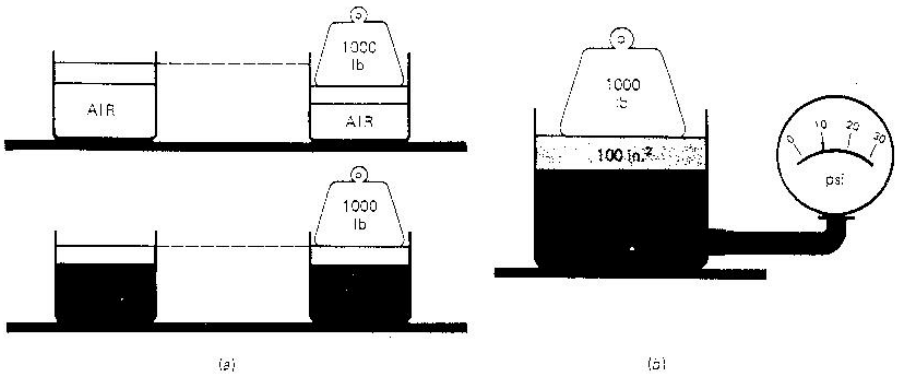

Fig. 9-4. (*a*) Unlike air, liquids cannot be compressed into a smaller volume. (*b*) An applied force, divided by the area of the cylinder, equals the pressure on the liquid.

1000 lb [454 kg]. The load, however, will be moved 1 in [25.4 mm], or twice as far. Therefore.

Volume of oil displaced × area of piston
= movement of lift piston

Hydraulic power also involves a second basic law, called the *law of conservation of energy*. This law states that energy can be neither created nor destroyed. That is, work done, or the output of energy, cannot exceed the input. For example, a mechanical lever jack is used to lift the right front wheel of a tractor in order to repair a flat tire (Fig. 9-7). The lift hook of the jack is placed under the wheel axle, and the handle of the jack is "pumped" up and down to raise the axle. The fulcrum point (the point where the handle of the jack pivots in its support) is 3 in [76.2 mm] from the center line of the jack. The lift handle (the lever to which force is applied to raise the axle) is 3 ft [0.914 meter (m)] in length. If the front wheel axle assembly weighs 720 lb [327 kg], a force of 60 lb [27.2 kg] applied to the lever would raise the wheel assembly as follows:

$$\text{Lever force} = \frac{720 \text{ lb} \times 0.25 \text{ ft}}{3.0 \text{ ft}}$$

$$= \frac{180 \text{ lb} \cdot \text{ft}}{3.0 \text{ ft}}$$

$$= 60 \text{ lb } [27.2 \text{ kg}]$$

Hydraulic Jack

Most service centers use a hydraulic *jack* to lift heavy objects such as a tractor. This type of jack provides a more efficient mechanism than the mechanical lever jack method and serves as a good example of the practical application of the principles of hydraulic power previously illustrated.

The piston (ram) of the hydraulic jack is placed under the axle of the tractor. The service worker pumps a short lever on the jack (Fig. 9-8), which

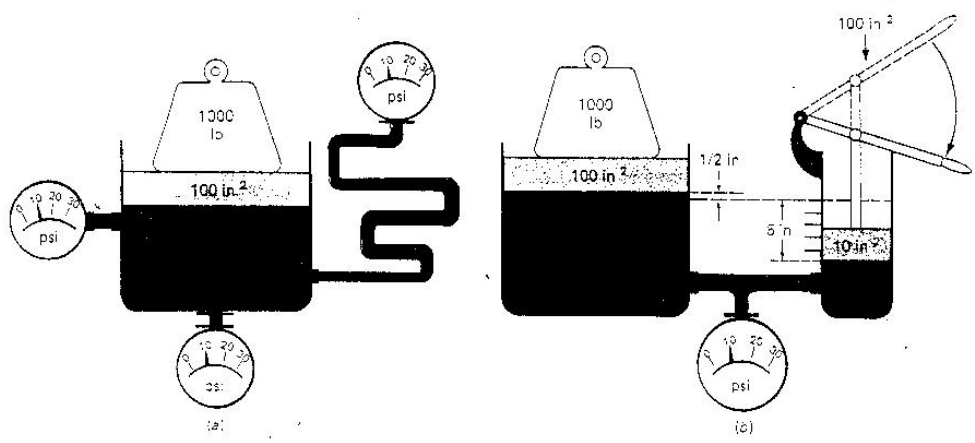

Fig. 9-5. (*a*) Liquids are classified as flexible solids. (*b*) A force of 100 lb divided by the pump cylinder volume of 10 in² equals a force of 10 psi on the fluid. Acting on 100 in², the pressure will support 1000 lb.

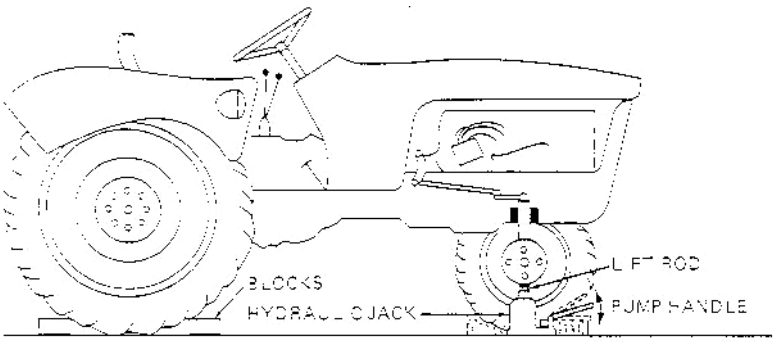

Fig. 9-8. A safer, more efficient method for raising the tractor wheel is to use a hydraulic jack.

By using the hydraulic jack the mechanical advantage obtained was 4242 lb of force output from 60 lb of force input, or approximately 71:1 ($^{4242}/_{60}$). Thus, the serviceperson would need to apply approximately 10.2 lb [4.63 kg] of force ($^{720}/_{71}$ lb) on the handle to lift the 720-lb [327-kg] tractor axle (Fig. 9-8).

HYDROSTATIC POWER COMPONENTS

The hydraulic jack (Fig. 9-9) illustrates the basic parts required of a hydrostatic hydraulic system. These parts include (1) a reservoir to hold a supply of oil, (2) a pump capable of moving the fluid (oil) in the system against a resistance, (3) control valves to direct the flow of liquid, and (4) a device such as a hydraulic cylinder (ram) or hydraulic motor to be operated by the fluid.

Hydraulic Pump

The heart of a hydrostatic power transmission system is the *positive-displacement* pump. A pump for a hydrostatic system will displace (move) a certain quantity of oil in a stated period of time within the working pressure of the system. For example, a positive-displacement pump may be rated in gallons per minute [liters per minute] at a pressure of 1000 to 5000 psi [6900 to 34,500 kPa]. It is important to remember that a pump does not itself develop pressure. A pump creates movement of the liquid (oil). The pressure created is the result of resistance to the flow of liquid from the pump.

To produce a steady movement of the hydrostatic power transmission system, the pump must be capable of producing a continuous flow of liquid. The piston pump illustrated in Fig. 9-9 provides "positive displacement"; that is, each stroke of the piston displaces a given volume of oil. However, the up-and-down movement of the piston would produce a pulsating flow of oil, and the lift ram would move in jerks. Modern hydraulic systems use valved positive-displacement pumps to provide a constant flow of oil and smooth piston action.

Control System

A system of valves is used to control the flow of fluid for the hydrostatic system. Valves not only are used to control the amount and direction of the fluid.

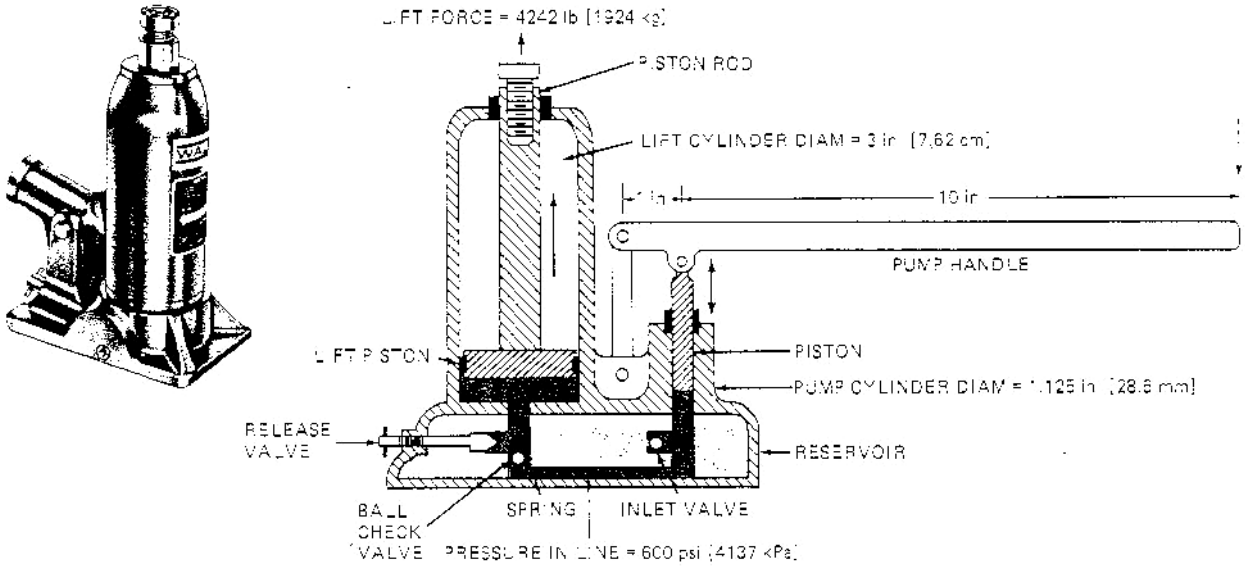

Fig. 9-9. Cross section of a hydraulic jack. A force of 60 lb [27.2 kg] on the pump handle is capable of developing a ram lift force of 4242 lb [1924 kg]. *(Walker Mfg.)*

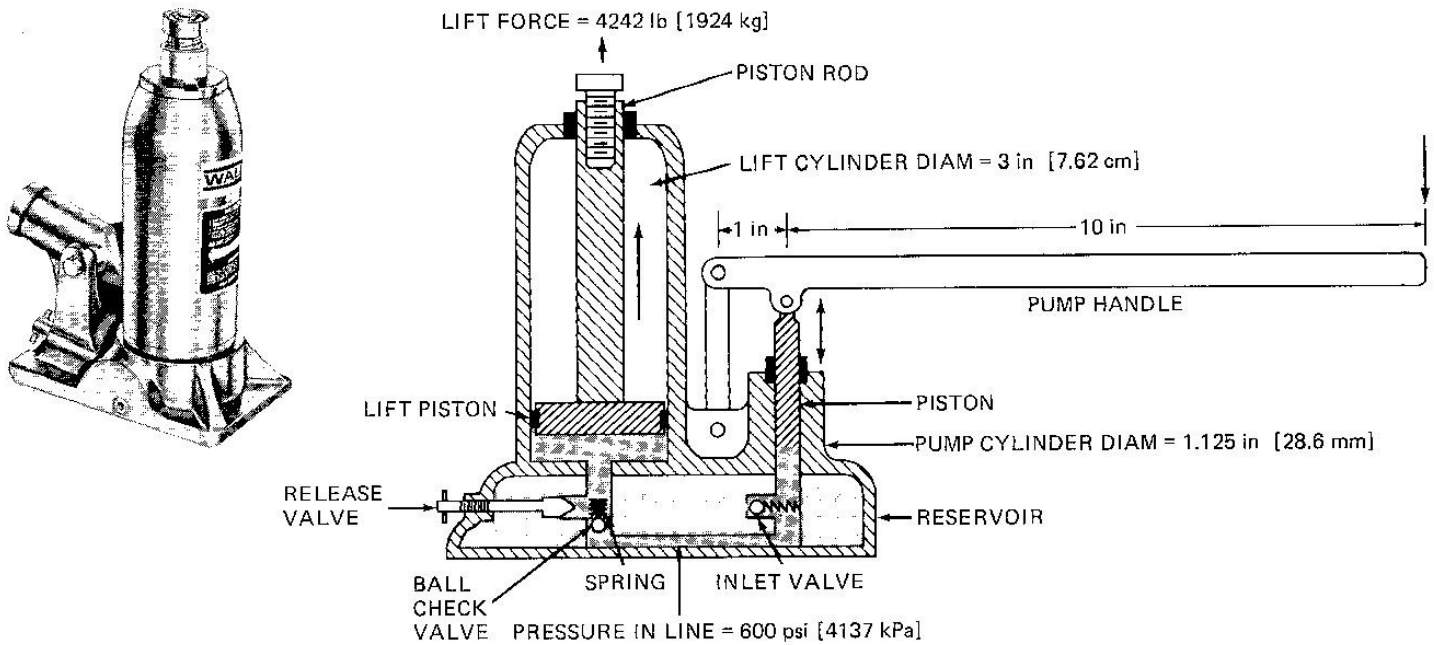

Fig. 9-9. Cross section of a hydraulic jack. A force of 60 lb [27.2 kg] on the pump handle is capable of developing a ram lift force of 4242 lb [1924 kg]. (*Walker Mfg.*)

2008 NATIONAL FFA AGRCULTURAL MECHANICS CDE TEAM ACTIVITY

ANSWER SHEET

HOME

ANSWER THE FOLLOWING QUESTIONS AND TYPE THE ANSWER IN THE BOX TO THE RIGHT OF THE QUESTION. PRINT OFF THIS FORM AND TURN IN AS DIRECTED BY EVENT SUPT.

TYPE YOUR STATE NAME IN THE BOX.

1. What is the maximum lift height of this jack?

2. What is the minimum lift height of this jack?

3. What is the measured diameter of the Piston?

4. What is the measured diameter of the Plunger?

5. What is the calculated area of the Piston?

6. What is the calculated area of the Plunger?

7. How many ounces of fluid are held in the jack?

8. What is the calculated Mechanical Advantage of the lever?

9. What is the calculated oil pressure (psi) of the jack?

10. What is the calculated lift force (in lbs.) of the jack?

11. What is the maximum weight of the trailer you can lift with this jack?

2007 Examination for the National Agricultural Mechanics Career Development Event: ANIMAL PRODUCTION SYSTEMS

Mark all answers on the Scantron sheet using a pencil. *Read each question carefully and identify the single correct answer. Use the blank sheets of paper to do all scratch work. Students will need a calculator to complete this examination, but they are* ***not allowed*** *to share a calculator with another student.*

SECTION 1: MACHINERY & EQUIPMENT SYSTEMS Question 1-20

1. When purchasing a tractor, the salesperson describes the amount of weight the unit can pull at a given speed. What kind of power is being described by the salesperson?
A. Engine power
B. Drawbar power
C. PTO (power take-off) power
D. Hydraulic power

2. What is the name of the device used to measure tractor PTO (power take-off) horsepower?
A. Dynamometer
B. Load cell
C. Wattmeter
D. Calorimeter

3. The theoretical field capacity of a machine such as a disk harrow or chisel plow is a function of what two factors?
A. Tillage depth and working width
B. Travel speed and working width
C. Tractor power output and draft load
D. Machine rating and velocity

4. The average farm tractor will convert about what percentage of PTO (power take-off) power to drawbar power?
A. 40 percent
B. 55 percent
C. 86 percent
D. 100 percent

5. A diesel engine produces white-colored exhaust. What is the most likely cause?
A. Low engine temperature
B. Combustion of engine oil
C. Restricted air intake
D. Turbocharger failure

6. A diesel engine produces blue-colored exhaust. What is the most likely cause?
A. Low engine temperature
B. Combustion of engine oil
C. Restricted air intake
D. Turbocharger failure

7. Which of the following is a benefit associated with using dual rear tires?
A. Stress on axles, bearings, and power trains is reduced
B. Turning the tractor becomes easier
C. Tractor stability is improved
D. Tractor performance is improved, especially under light drawbar loads

8. Which of the following components gives the final reduction in speed and increase in torque in a tractor power train?
A. Clutch
B. Transmission
C. Differential
D. Final drives

9. Which hydraulic system component converts mechanical energy into hydraulic energy?
A. Hydraulic pump
B. Relief valve
C. Directional control valve
D. Actuator (such as a hydraulic cylinder)

DO NOT WRITE OR MARK ON EXAM

10. If I have a hydraulic system on an off-highway vehicle and it has foaming hydraulic fluid, what is most likely the problem?
A. The fluid is dirty
B. Water is in the hydraulic fluid
C. The fluid level is too low
D. The hydraulic pump is going bad

11. What is the appropriate range of tire slippage for a farm tractor?
A. 0 to 2 percent
B. 10 to 15 percent
C. 20 to 25 percent
D. 30 to 35 percent

12. Which of the following causes knock in a diesel engine?
A. Fuel igniting properly
B. Fuel igniting too rapidly
C. Fuel igniting too slowly
D. Incomplete combustion

13. Which of the following would be considered a fuel conservation technique?
A. Operating tractor at partial load
B. Making unnecessary tillage trips
C. Shifting to a lower gear and "throttling" up under light load
D. Shifting to a higher gear and "throttling" down under light load

14. Which of the following items represents a machinery <u>operating</u> cost?
A. Taxes
B. Insurance
C. Shelter
D. Maintenance

15. Which of the following items represents a <u>fixed</u> machinery cost?
A. Fuel
B. Repairs
C. Depreciation
D. Labor

16. A tractor pulling a scraper on firm soil requires 225 drawbar horsepower to travel at 3 miles per hour. Approximately how much drawbar pull in pounds is the tractor exerting?
Note: Drawbar Power = Pull x Speed)375
A. 675 lbs
B. 28,100 lbs
C. 56,300 lbs
D. 84,400 lbs

17. A tractor produces 225 PTO horsepower at a rated power take-off speed of 1000 revolutions per minute. Approximately how much torque in foot-pounds does the tractor produce at the power take-off shaft?
Note: PTO Power = <u>Torque x Rotational Speed</u>) 5252
A. 225 ft-lb
B. 1,000 ft-lb
C. 1,180 ft-lb
D. 225,000 ft-lb

18. A skid-steer loader is used to move soil from a stockpile. The loader uses two 3-inch by 36-inch hydraulic cylinders to raise and lower the loader lift arms. If the loader's hydraulic system can generate a maximum pressure of 2,500 pounds per square inch, approximately what is the maximum lifting force (pounds) that each cylinder can produce?
A. 2,500 lbs
B. 7,900 lbs
C. 17,700 lbs
D. 70,700 lbs

19. A twenty-foot-long dump truck bed is 54 inches deep and seven feet wide. What is the approximate capacity of the truck bed in cubic yards if a load is struck level across the top?
A. 23 yd^3
B. 70 yd^3
C. 210 yd^3
D. 630 yd^3

DO NOT WRITE OR MARK ON EXAM

20. Three equally-sized pull-type scrapers are being operated with large tractors. Each scraper pan measures four feet deep, 10 feet wide, and four feet long. If all three scraper pans can be filled (struck even) in eight minutes and it requires an average of 12 additional minutes to dump and restart the filling of each scraper, what is the approximate total capacity of the three scrapers in cubic yards per hour?
A. 17.8 yd^3/hr
B. 53.3 yd^3/hr
C. 160.0 yd^3/hr
D. 480.0 yd^3/hr

SECTION 2: INDUSTRY AND MARKETING SYSTEMS Question 21-40

21. Which factors influence the minimum horsepower required when selecting a tractor?
A. Desired implement width and operation speed
B. Interest rates and fuel costs
C. Service life and commodity prices
D. Labor costs and fuel prices

22. Which of the following is the safest way to drive a loader up hill with a full bucket?
A. Back straight up the hill
B. Drive forward straight up the hill
C. Drive forward diagonally across the slope of the hill
D. One method is not safer than another

23. Which factors are used to calculate the material capacity of a machine?
A. Machine width and height
B. Material weight and time
C. Machine RPM and down time
D. Machine draft and width

24. Which of the following correctly describes the requirement for tractor ROPS?
A. Family farms do need ROPS
B. Farms with fewer than 10 employees do need ROPS
C. Tractors under 50 horsepower do need ROPS
D. Tractors used in orchards (low profile) may need a ROPS that can be lowered

25. Which of the following is the cause for the majority of fatal tractor accidents?
A. Tractor overturns
B. Being run over by a tractor
C. Power take off entanglements
D. Hydraulic system failure

26. Which of the following agricultural machines has been involved in the greatest number of accidents?
A. Combines
B. Elevators
C. Tractors
D. Wagons

27. Which soil type normally offers the least draft for a disk harrow?
A. Clay Loam
B. Silt Loam
C. Clay
D. Sandy Loam

28. Which of the following will reduce the total operating cost per hour for a skid-steer loader?
A. Pay cash for the loader
B. Increase the annual hours of operation
C. Decrease the annual hours of operation
D. Decrease the years of ownership

29. Which of the following would be considered a shear point safety hazard?
A. Pulleys and belts
B. Disc mowers
C. PTO shafts
D. Grain augers

DO NOT WRITE OR MARK ON THIS EXAM

30. When pulling (towing) a heavy load behind a tractor where should a chain be attached to the tow tractor?
A. The tractor's rear axel
B. The top three point hitch of the tractor's draft link
C. The tractor's drawbar
D. The tractor's ROPS

31. Which of the following is true with regard to the interest expense associated with a machinery purchase?
A. Interest on the cash used to purchase the machine is an indirect expense.
B. Interest on the cash used to purchase the machine is a direct expense.
C. Interest on the money borrowed to purchase the machine is an indirect expense.
D. Interest on the dealer discount is an indirect expense.

32. The symbol at the right appears on a tractor.
What does it indicate?

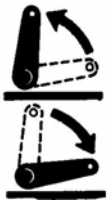

A. Differential lock
B. PTO control
C. Three-point hitch control
D. Remote hydraulics

33. The symbol at the right appears on a tractor console.
What does it indicate?

A. Engine Oil Pressure
B. Coolant Temperature
C. Transmission Oil Temperature
D. Transmission Oil Pressure

34. Which of the following costs are generally considered to remain unchanged when the hours of machine use varies?
A. Operating and labor costs
B. Lubrication costs
C. Fuel cost
D. Interest cost

35. A John Deere utility tractor has been re-equipped with low profile tires (smaller diameter than the factory equipped tires) for orchard use. How will the smaller diameter tires change the relative ground speeds listed in the operator's manual for specific RPMs and gear settings? Assume both tires sizes are properly inflated.
A. The speeds listed in the manual will be slower than the actual tractor speed
B. The speeds listed in the manual will be faster than the actual tractor speed
C. The speeds listed in the manual will be the same as the actual tractor speed
D. The speeds listed in the manual will be slower for high gears (3&4) and faster for low (1&2) gears

36. If the local property tax rate is 1%, what is the tax cost per year on a potato storage facility with a value of $150,000?
A. $ 15
B. $ 150
C. $ 1500
D. $ 15000

37. A loader was purchased 5 years ago for $52,000 and has an estimated 10 year life. If the accumulated depreciation is $23,400 what is the current book value?
A. $23,400
B. $26,000
C. $28,600
D. $52,000

38. Concrete delivered to a farm costs $90 per cubic yard. If the exact amount of concrete needed is purchased, what is the approximate cost for concrete to be delivered to a farm for a slab 6 inches thick, 40 feet wide, and 200 feet long?
Note: 1 cubic yard = 27 cubic feet
A. $ 1,448
B. $ 13,333
C. $ 68,889
D. $ 80,000

DO NOT WRITE OR MARK ON THIS EXAM

39. A right-triangle shaped concrete slab that is eight inches thick will be poured. The two shorter sides of the triangular concrete slab will be are 30 feet and 40 feet. What is the length of the long side (hypotenuse) of the triangular slab?
Note: (Length Side A)^2 + (Length Side B)^2 = (Length Side C)^2 where C is the hypotenuse of the triangle
A. 30 feet
B. 40 feet
C. 50 feet
D. 60 feet

40. A truck tire is warranted for 50,000 miles and costs $360. The warranty credits a prorated amount of the purchase price toward a replacement tire based on miles of service. What warranty amounted is credited toward the price of a new replacement tire if the older tire fails after 40,000 miles of service?
A. $ 72
B. $ 131
C. $ 188
D. $ 240

SECTION 3: ENERGY SYSTEMS Question 41-60

41. When the piston of the four stroke small engine reaches the bottom of the cylinder on the intake stroke it starts upward on what stroke?
A. Exhaust
B. Combustion
C. Compression
D. Power

42. The intake valve of a 4-stroke single-cylinder small engine is opened and closed by the action of what component?
A. Piston
B. Throttle
C. Wrist pin
D. Camshaft

43. What is the part of the coil that is made of several thousand turns of fine gage wire?
A. The secondary circuit
B. The main circuit
C. The primary circuit
D. The complete circuit

44. Modern small engines use a solid state ignition system to open and close the primary circuit. What part of the small engine ignition system opened and closed the primary circuit prior to the solid state system?
A Transistors
B. Breaker Points
C. integrated chips
D. Coil

45. What does the Octane rating of gasoline indicate?
A. The ability of the engine to prevent engine compression
B. The inability of the engine to prevent engine knock
C. The ability of the engine to prevent engine knock
D. The ability of the engine to prevent engine post ignition

46. Which of the following describes the correct level for engine oil in a four cycle lawn mower when it is not equipped with a dipstick?
A. Oil should fill the crankcase to the point that it flows from the crankcase breather
B. Oil should be level with the top of the crankcase
C. Oil should be level with the top of the crankshaft
D. Oil should be level with the top of the filler plug opening

47. A partially sheared flywheel key can result in which of the following?
A. An increase engine power
B. Altered engine timing
C. A decrease in engine compression ratio
D. Altered engine head bolt torque

DO NOT WRITE OR MARK ON THIS EXAM

48. Which of the following tools is used to measure the inside diameter of the cylinder of a small engine?
A. Feeler gauge
B. Plastigage and ruler
C. Telescoping gauge and micrometer
D. Air pressure gauge

49. What term identifies the outer edge of the head of an engine valve?
A. The margin
B. The tail
C. The face
D. The stem

50. Which of the following tools is used to measure the outside diameter of crankshaft surfaces in a small engine?
A. Micrometer
B. Inside micrometer
C. Telescoping gauge
D. Feeler gauge

51. In four-stroke small gasoline engines, how fast does the camshaft turn with respect to the speed of the crankshaft?
A. The camshaft turns at one-half the speed of the crankshaft
B. The camshaft turns at the same speed as the crankshaft
C. The camshaft turns at twice the speed of the crankshaft
D. The camshaft turns at four times the speed of the crankshaft

52. What is the name given to the tiny projections left on the bearing surface of a connecting rod from the machining process?
A. Slag
B. Porosity
C. Kerf
D. None of the above

53. The American Petroleum Institute provides standards that indicate the performance level and quality of engine oil as indicated by the EOLCS program. What is the name of the program with the acronym EOLCS?
A. Engine Overloading Lubrication and Corrosive Standards
B. Engineering Office Lifetime Corrective Standards
C. Engine Operation Life and Casualty System
D. Engine Oil Licensing and Certification System

54. Which of the following is a true statement concerning the crankshaft of a multiple cylinder engine?
A. The multiple cylinder crankshaft must be shorter than that of the crankshaft for single cylinder engine
B. The multiple cylinder crankshaft must have multiple crankpin journals to operate the intake and exhaust valves
C. The multiple cylinder crankshaft must have multiple crankpin journals to accommodate multiple connecting rods
D. The multiple cylinder crankshaft must have multiple magneto journals to accommodate multiple ignition systems

55. What is the name given to the printed safety information that must be kept on file for each hazardous material kept or used in a small engine shop?
A. Management Safety Detection Sheet
B. Material Safety Deterrent System
C. Material Safety Data Sheet
D. Management Safety Depreciation System

56. What is the pressure exerted on a piston head with an top surface area of 4.91 square inches during the combustion process that applies a total force of 2000 pounds?
Note: (Pressure in pounds per square inch) = (Force in pounds) ÷ (Area in square inches)
A. 230.33 psi
B. 367.33 psi
C. 407.33 psi
D. 511.33 psi

57. A 10 horsepower single cylinder engine is operating at 5000 feet above sea level. What approximate horsepower is produced by the engine if the engine's power is decreased 2.5 percent for each 1000 feet of elevation above sea level?
A. 6.65 horsepower
B. 7.52 horsepower
C. 8.75 horsepower
D. 9.62 horsepower

58. What is the approximate displacement of a three cylinder engine with cylinders having 3.6-inch bores (diameters) and 4.25-inch strokes?
Given: Displacement of one cylinder in cubic inches = (π) x (Bore diameter in inches ÷ 2)^2 x (Stroke in inches)
Volume of cylinder = (π) x (r)^2 x (length) (π = 3.14, r = radius)
A. 129.8 cubic inches
B. 164.2 cubic inches
C. 194.6 cubic inches
D. 224.2 cubic inches

59. What is the engine horsepower required to drive a 5kW generator?
Note: Required Horsepower = (kilowatts) x (1.34) ÷ (0.70)
A. 7.26 horsepower
B. 8.30 horsepower
C. 9.57 horsepower
D. 10.39 horsepower

60. How much torque in ft-lbs is applied to a head bolt by applying 120 pounds of force on the end a wrench 12 inches in length? Note: Torque in ft-lbs = (Force in pounds) x (Length of lever arm in inches)
A. 120 ft-lbs
B. 720 ft-lbs
C. 1,440 ft-lbs
D. 14,400 ft-lbs

SECTION 4: STRUCTURAL SYSTEMS Questions 61-80

61. In electrical terminology, what is the meaning of the abbreviation AC?
A. Arc current
B. Always current
C. Alternating current
D. Acetylene current

62. Which of the following colors are correct for oxygen and acetylene hoses?
A. Red for acetylene, green for oxygen
B. Green for acetylene, red for oxygen
C. Yellow for acetylene, green for oxygen
D. Green for acetylene, yellow for oxygen

63. On a basic constant current arc welding machine, what does the primary/main adjustment control?
A. Oxygen
B. Amperage
C. Wattage
D. Temperature

64. On a typical shielded metal arc welding E7018 electrode the 70 indicates what value for tensile strength?
A. 70 psi tensile strength
B. 700 psi tensile strength
C. 7,000 psi tensile strength
D. 70,000 psi tensile strength

65. What welding agency or entity does the acronym AWS identify?
A. Alternative Welding System
B. Associated Welding Stores
C. Arc Welding System
D. American Welding Society

66. Ductility is the ability of a metal to do what before it breaks?
A. Resist penetration
B. Return to it original shape after stretching
C. Elongate
D. Harden

67. What is the length of the most commonly used electrode for the process of shielded metal arc welding?
A. 8 inches
B. 10 inches
C. 14 inches
D. 18 inches

DO NOT WRITE OR MARK ON EXAM

68. What is a common name for the shielded metal arc welding process?
A. Wire welding
B. Stick welding
C. MIG welding
D. Tungsten welding

69. Which of the following statements is correct with respect to wearing safety glasses while welding?
A. Safety glasses are not needed for other metal working activities as long as a face shield is worn while welding
B. Safety glasses should be darkly tinted to protect the eyes at all times while performing metal working activities
C. Safety glasses should be worn continuously while working with or near metal working activities
D. Safety glasses are not needed when a welding helmet is worn, because the helmet protects the eyes from all welding related hazards

70. What would be a negative effect of insufficient shielding gas flow in the gas metal arc welding process?
A. Wide flat configuration of completed welling bead
B. Porosity
C. Undercutting
D. Excessive molten puddle cooling

71. Which of the following terms describe the appropriate power source for the gas metal arc welding process?
A. Constant voltage
B. Constant current
C. Straight voltage
D. Reverse current

72. What type of power supply is used for the flux core arc welding process?
A. Alternating current
B. Constant voltage
C. Cosmic accumulator
D. Constant current

73. On a direct current arc welding machine, what electrical component converts the incoming alternating current into direct current for welding?
A. A rectifier
B. A transformer
C. An adjustable primary coil
D. A straight polarity switch

74. What is another named used to describe the gas metal arc welding process?
A. Metal infrared gas welding
B. Metal inside gas welding
C. Metal inert gas welding
D. Metal ion gas welding

75. What is the name of the cleansing agent that is used to prevent the formation of oxides, release trapped gases, and slag and cleanse the metal chemically during the welding, brazing, and/or soldering?
A. Flux
B. Striker
C. Lintel
D. Pixel

76. Which of the following safety concerns related to welding is more likely to occur gradually over an extended period of time?
A. Injury to eyes from flying metal or sparks
B. Blisters on eyes from watching a welding arc without proper eye protection
C. Burns from the handling of or coming in contact with heated metals
D. Hearing loss caused by extended exposure to elevated sound levels

77. A total of 410.5 feet of steel rod is used to construct a hay feeding rack and the rod weighs 0.658 pounds per foot of length. If the filler metal from welding adds an additional 2.8 pounds to the overall weight, what is the approximate total weight of the hay feeding rack?
A. 166 pounds
B. 191 pounds
C. 224 pounds
D. 273 pounds

DO NOT WRITE OR MARK ON EXAM

78. Steel angle iron is sold for $1.59 per linear foot, steel rod is sold for $1.34 per linear foot, and steel pipe is sold for $2.68 per linear foot. If 9.5 feet of angle iron, 12.75 feet of rod, and 22.25 feet of pipe are purchased, what is the total price for the metal before taxes?
A. $ 91.82
B. $ 96.20
C. $111.64
D. $131.48

79. There is 165 feet of steel rod, 209 feet of steel pipe, 147 feet of steel tubing, and 182 feet of steel channel iron. If each type of steel is sold for $1.39 per linear foot, what is the total price for all the metal before taxes?
A. $ 799.27
B. $ 833.30
C. $ 977.17
D. $ 1,104.20

80. Steel angle iron weighs 1.32 pounds per linear foot and cost $78.88 for a 20-foot length. Steel pipe weighs 1.19 pounds per linear foot and cost $83.57 for a 20-foot length. If 118 pounds of each type of steel is purchased, which of the following statements is correct?
A. 120 pounds of steel angle iron will be exactly the same length as 120 pounds of steel pipe
B. 120 pounds of steel angle iron will provide more linear feet of length than 120 pounds of steel pipe
C. 120 pounds of steel pipe will provide more linear feet of length than 120 pounds of steel angle iron
D. 120 pounds of steel angle iron or 120 pounds of steel pipe will each be more than 100 linear feet of steel

SECTION 5: ENVIRONMENTAL AND NATURAL RESOURCE SYSTEMS Question 81-100

81. What characteristic is the most useful for evaluating a fan used to dry grain while stored in a bin?
A. Gallons per minute (gpm)
B. Pounds per square inch (psi)
C. Bushels per hour per kiloWatt (bph/kW)
D. Cubic feet per minute per bushel (cfm/bu)

82. Which of the following are two types of fans that used to force air through grain in a grain bin?
A. Centrifugal and axial
B. Turbine and axial
C. Tubular and elastic
D. Static and dialectric

83. What determines the temperature to which seed grain should be dried?
A. Differs significantly between seed types
B. Depends directly on the relative humidity of the ambient (outside) air
C. For maximum seed viability the temperature is relatively high 400 F
D. For maximum seed viability the temperature is relatively low such as 100 F

84. Stress cracks in grain corn kernels can be caused when high temperature grain drying is followed by which process?
A. Slow heating of the dried grain
B. Rapid cooling of the dried grain
C. Waterification of the dried grain
D. Rapid heating of the dried grain

85. What is the maximum moisture content for the safe long term storage of shelled corn?
A. 13 to 15 %
B. 16 to 18 %
C. 19 to 21 %
D. 22 to 24 %

86. What are the two most common locations where wet or spoiled grain is likely to be found in a loaded grain bin?
A. Top and bottom of the grain
B. Top-center of the grain and next to the wall of the bin
C. Bottom-center of the grain and next to the wall of the bin
D. Center of the grain and bottom of grain

87. What are two problems that can occur when broken grain and foreign material (fines) are present in stored grain?
A. Increased in temperature and carbohydrates
B. Reduced ducting and infiltration
C. Decreased spoilage and increased aeration
D. Increased spoilage and restricted air flow

DO NOT WRITE OR MARK ON EXAM

88. The operation of the bale accumulator and a bale ejector in baling equipment help reduce what input during the harvest of hay?
A. Manual labor
B. In field drying requirement
C. Average fuel costs per gallon
D. The required power takeoff horsepower

89. What two mishaps may occur when an operator stacks large round bales using a tractor-mounted front-end loader?
A. Fuel contamination and frequent flat tires
B. Bale size reduction and forage waste
C. Rear tractor rollovers and crusting
D. Bale rollback and tractor rollover

90. What percentage of hay is contained in the outer 4 inches of a 6-foot diameter round bale?
A. 35%
B. 30%
C. 20%
D. 10-%

91. What percent moisture content is alfalfa baled at when making large round bale silage?
A. 10-15%
B. 20-30%
C. 40-60%
D. 80-90%

92. When storing large round bales outside, the site should have which following characteristic?
A. Located in a gully
B. Steep slope
C. Well drained
D. Poorly drained

93. How should round bales be stacked when stored in a barn?
A. On end to reduce pressure on the barn wall
B. On the round side to allow easy rolling
C. On the round side to allow rapid drying
D. On end to allow rapid drying

94. Until modern square bale handling equipment was available, what has been the major drawback in the production square bales?
A. Difficulty in securing twine knots
B. Process was very labor intensive
C. Uniform bale size was not possible
D. Tractor travel speed through the field was very slow

95. How many square feet are in 11.0 acres? Note 1 acre = 43, 560 square feet
A. 297,850 ft^2
B. 366,720 ft^2
C. 479,160 ft^2
D. 524,890 ft^2

96. What is the approximate circumference of a round hay bale that 5 foot 9 inches in diameter?
Note: Circumference of circle = (π) x (diameter) 1 foot = 12 inches; Volume of cylinder = (π) x $(r)^2$ x (length) (π = 3.14, r = radius)
A. 14 feet
B. 18 feet
C. 22 feet
D. 26 feet

97. What is the volume of a 6-foot diameter round bale that is 5-feet long?
Note: Volume of cylinder = (π) x $(r)^2$ x (length) (π = 3.14, r = radius)
A. 101 ft^3
B. 141 ft^3
C. 198 ft^3
D. 238 ft^3

98. What is the approximate combined total weight of a trailer weighing 9,445 pounds when it is loaded with 525 bushels of shelled corn that weighs 56.4 pounds per bushel?

A. 31,000 lbs
B. 34,000 lbs
C. 39,000 lbs
D. 42,000 lbs

99. Approximately how much time is required to remove 750 round hay bales from a field if bale transport can be completed at an average hauling rate 11.5 bales per hour? Note: 1 hour = 60 minutes

A. 64 hours and 48 minutes
B. 65 hours and 2 minutes
C. 65 hour and 13 minutes
D. 65 hours and 22 minutes

100. A tractor fueled by No. 2 diesel burns 7.75 gallons per hour. When the same tractor is fueled with B20 biodiesel it burns 8.25 gallons per hour. Approximately how many more gallons of fuel will the tractor use during eight hours of operation if it is fueled by B20 biodiesel rather than No. 2 diesel?

A. 2.5 gallons
B. 3.0 gallons
C. 3.5 gallons
D. 4.0 gallons

End of Examination

Students please affix one of the self adhesive labels from your sheet of identification labels to this page. Make sure the edges of the label are within the boundaries of this box and that the affixed label does not obscure any other parts of this page. If you do not have a self adhesive identification label, please complete the following information.

Your Name: _____

Write your name as it appears on your name badge.

Your Participant Code:

			0	3			0	

Write your participant code as it appears on your name badge.

Two letter state abbreviation.

State code (0301, 0302, …… to 0350)

Team member number (01, 02, 03, or 04)

Students please do not write or mark within this box.

Judges, after this skill sheet has been scored and double checked, write the total score for this activity in the blank below.

Skill Activity Score: _____

Judge's Initials: _____

2008 National FFA Agricultural Mechanics Career Development Event

Energy Systems Skill Activity

Systems

Instructions:

1. Eye protection (safety glasses) is required at all times.
2. You will have 20 minutes to complete this activity.
3. Use the References provided (2008 NEC & 9th Edition AAVIM Electrical Wiring) to plan the correct wiring of the problem provided.
4. Using the tools and materials provided, complete the wiring of the metal surface mounted boxes in accordance with the 2008 National Electric Code and the attached electrical schematic drawing.
5. You may use the attached diagram to sketch the wiring problem if desired. The diagram will not be scored.
6. Only prepare the wire ends, make hooks where necessary, and attach wires to device screw terminals. **Do not cut any wire!**
7. Do not **Backwire** any devices **except the GFCI.**
8. Do not attach any of the devices to the boxes.
9. Do not tuck any of the conductors (wire) into the boxes.\
10. Submit this sheet (and attachments) to the officials upon completion of the problem or when time is called.

Evaluation Score Sheet (for contest officials, only):

	Item	Possible	Earned
1.	**Workability of wiring problem**	**5**	_____
2.	**Used white wire correctly (identified)**	**4**	_____
3.	**Grounding (bond) wires properly used**	**4**	_____
4.	**Wire hooks made and used properly**	**4**	_____
5.	**Splicing conductors (size, tight, no exposed wire)**	**4**	_____
6.	**Identified terminals correctly used**	**4**	_____
7.	**Safety and Work Habits**	**5**	_____
	Total	**30**	_____

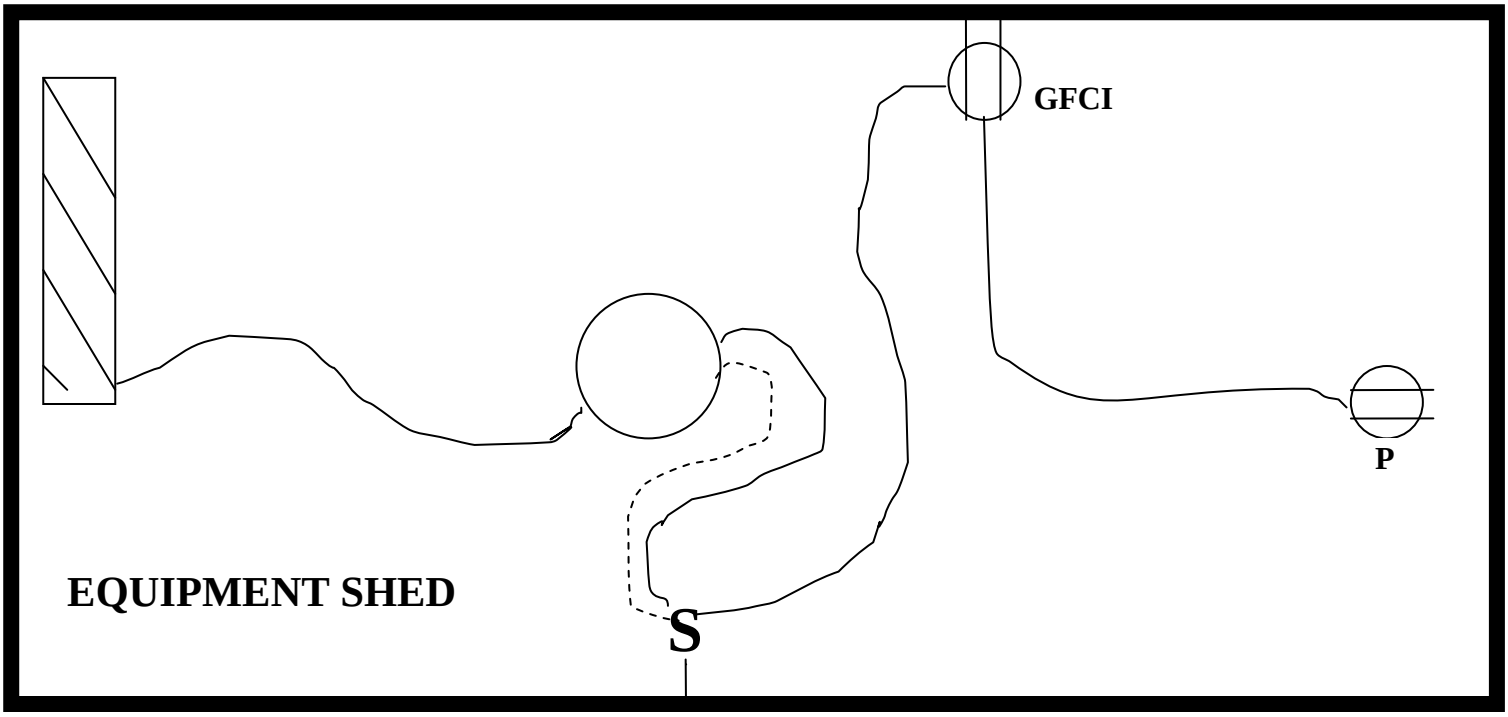

Box 1
Wire Count ____
Box Type ____
Box Size _____

Box 2
Wire Count ____
Box Type ____
Box Size ____

Box 3
Wire Count ____
Box Type ____
Box Size ____

Box 4
Wire Count ____
Box Type ____
Box Size ____

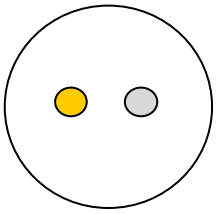

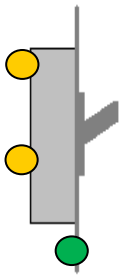

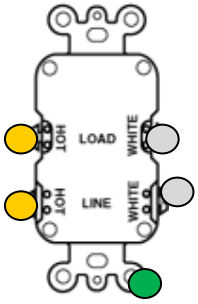

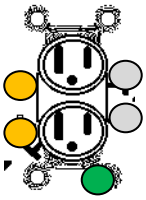

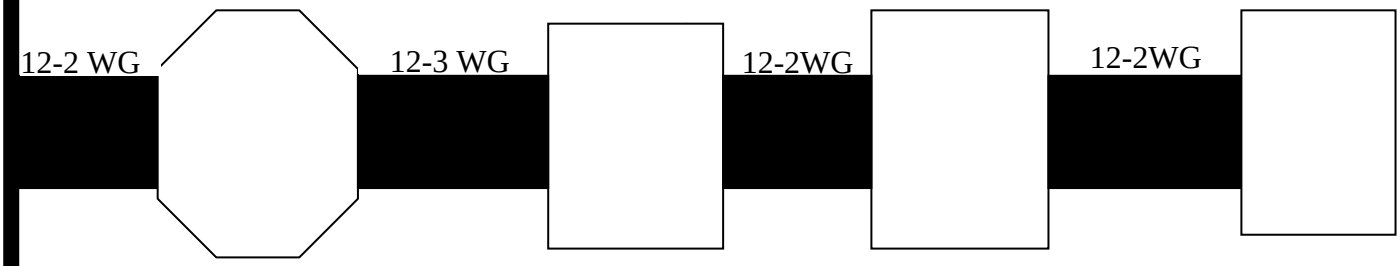

Students please affix one of the self adhesive labels from your sheet of identification labels to this page. Make sure the edges of the label are within the boundaries of this box and that the affixed label does not obscure any other parts of this page. If you do not have a self adhesive identification label, please complete the following information.

Your Name: _-

_____

Write your name as it appears on your name badge.

Your Participant Code: | | | ■ | 0 | 3 | | | ■ | 0 | |

Write your participant code as it appears on your name badge.

___ _____ ____

Two letter state abbreviation.

State code (0301, 0302, …… to 0350)

Team member number (01, 02, 03, or 04)

Students please do not write or mark within this box.

Judges, after this skill sheet has been scored and double checked, write the total score for this activity in the blank below.

Skill Activity Score: _____

Judge's Initials: _____

2008 National FFA Agricultural Mechanics Career Development Event

Machine and Equipment Systems Skill Sheet

There are multiple parts to this activity!

Please read and follow directions carefully! Use your time wisely!

GENERAL INFORMATION/DIRECTIONS:

For this skill activity, assume that you are the manager of a custom baling operation that harvests and sells switchgrass to an ethanol production facility. The operation uses rotor-cutter round balers with the cutting knives set at a 5" knife spacing to produce switchgrass in pre-cut round bales of 4 ft. width by 5 ft. diameter, averaging 800 lbs. each. The overall operation runs four tractor/baler combinations, with each machine running 8 hours a day, five days a week during the harvest season. Each bale made requires a total time of three minutes to form, wrap with net, and eject (each bale is held together with 3 full wraps of net). The net wrap is supplied in 6500 ft. rolls.

Your custom operation bales a total of 1000 acres of well established switchgrass, once each growing season, with an average yield of 6 tons/acre on a dry matter basis.

Before the harvest season begins, you will need to perform the following tasks: properly thread the baler with net, check and re-space the cutting knives if needed, and check and set the height of the pick-up fingers. All of the cutting knives have been installed but one, which you are to install at the proper spacing and the pick-up height has already been set, but must be checked.

PROCEDURES:

1. Because you are working around machinery, safety glasses must be worn at all times, and when installing the baler knife, the gloves provided must be worn.

   (Station No. _____) Baler brand _____ Model number _____.

2. According to the operator's manual, what is the recommended normal ground clearance for the pick-up fingers? _____ inches.

3. Do the pick-up fingers fall within the recommended ground clearance? Yes ____ No ____

4. Are the installed knives at the correct spacing? Yes ____ No ____

5. Install the remaining knife using the correct spacing.

6. Thread the net wrap into the baler correctly.

7. Using the operator's manual and information provided, determine the following items:

A. Calculate the average bale density in lbs/cu. ft. _____ lbs. /cu. ft.

$(V = \pi * r^2 * h)$

B. How many bales can be produced by each operator during an 8 hour shift? _____ bales

C. How many total bales can be produced by each tractor/baler combination per season? _____ bales

---

Skill Activity Score Sheet

Question Number	**Possible**	**Score**
1. Baler brand and model: (1)	2	_____
2. Recommended pick-up ground clearance correct: (2)	2	_____
3. Pick-up ground clearance is correct: (3)	2	_____
4. Baler knives installed at correct spacing: (4)	2	_____
5. Installed baler knife correctly in the machine: (5)	3	_____
6. Baler knife installed with the correct spacing: (5)	2	_____
7. Installed the net wrap correctly: (6)	5	_____
8. Bale density in cubic feet: (7.A)	3	_____
9. Individual baler capacity per shift: (7.B)	3	_____

10. Total bales produced per season: (7.C)	3	_____
11. Safety and work habits:	3	_____

TOTAL POINTS: (Double check point total and enter on front)	30	_____

Students please affix one of the self adhesive labels from your sheet of identification labels to this page. Make sure the edges of the label are within the boundaries of this box and that the affixed label does not obscure any other parts of this page. If you do not have a self adhesive identification label, please complete the following information.

Your Name: _____

Write your name as it appears on your name badge.

Your Participant Code:

			0	3				0	

Write your participant code as it appears on your name badge.

Two letter state abbreviation.

State code (0301, 0302, …… to 0350)

Team member number (01, 02, 03, or 04)

Students please do not write or mark within this box.

Judges, after this skill sheet has been scored and double checked, write the total score for this activity in the blank below.

Skill Activity Score: _____

Judge's Initials: _____

2008 National FFA Agricultural Mechanics Career Development Event

Industry and Marketing Systems Skill Activity

Directions: You work for a hydraulic systems supplier. In the course of the day you are asked to solve the following problems. Complete each problem using the specification sheets and references provided. You may use the back of this sheet for calculations. DO NOT WRITE OR MARK IN THE REFERENCE BOOK. Write each answer in the space provided LEGIBABLY. 5 points each.

Question	Answer	Score
A grape harvester uses the hydraulic system shown in the diagram (see reference book)		
1. Determine the model code for a BRAND Model EFC Flow control that has no reverse flow, port size of #12SAE, 0-20 gpm, a 12 volt DC coils and 2 ports for this application.	EFC _____	
2. Using the hydraulic diagram provided is the pump? a. Fixed Displacement b. Variable Displacement		
3. Using the same diagram how many hydraulic motors are needed for this machine?		
4. A White Drive hydraulic motor is model number (code) WR100. What flow will be needed to turn the motor at 400 RPM on the harvester?		
A customer needs two cylinders for a bin dumper on a packing line. Each cylinder must have a stroke of 30 inches and create a force of 2100 pounds (extending) with 1000 psi of hydraulic pressure.		
5. What is the minimum diameter cylinder needed for this application?	Inches	
6. Select the model number of the smallest cylinder that will meet these specifications from the provided Prince catalog pages.		
	TOTAL	

2008 National FFA Agricultural Mechanics Career Development Event

Industry and Marketing Systems Skill Activity

Hydraulic Reference Book

PLEASE DO NOT MARK IN THIS BOOKLET

Use this reference to complete your activity sheet.

Contents:

Hydraulic Control Diagram

Brand Control Specifications

Prince Cylinder Reference

White Drive Motor Reference

Hydraulic Symbol Reference

Hydraulic Formula Reference

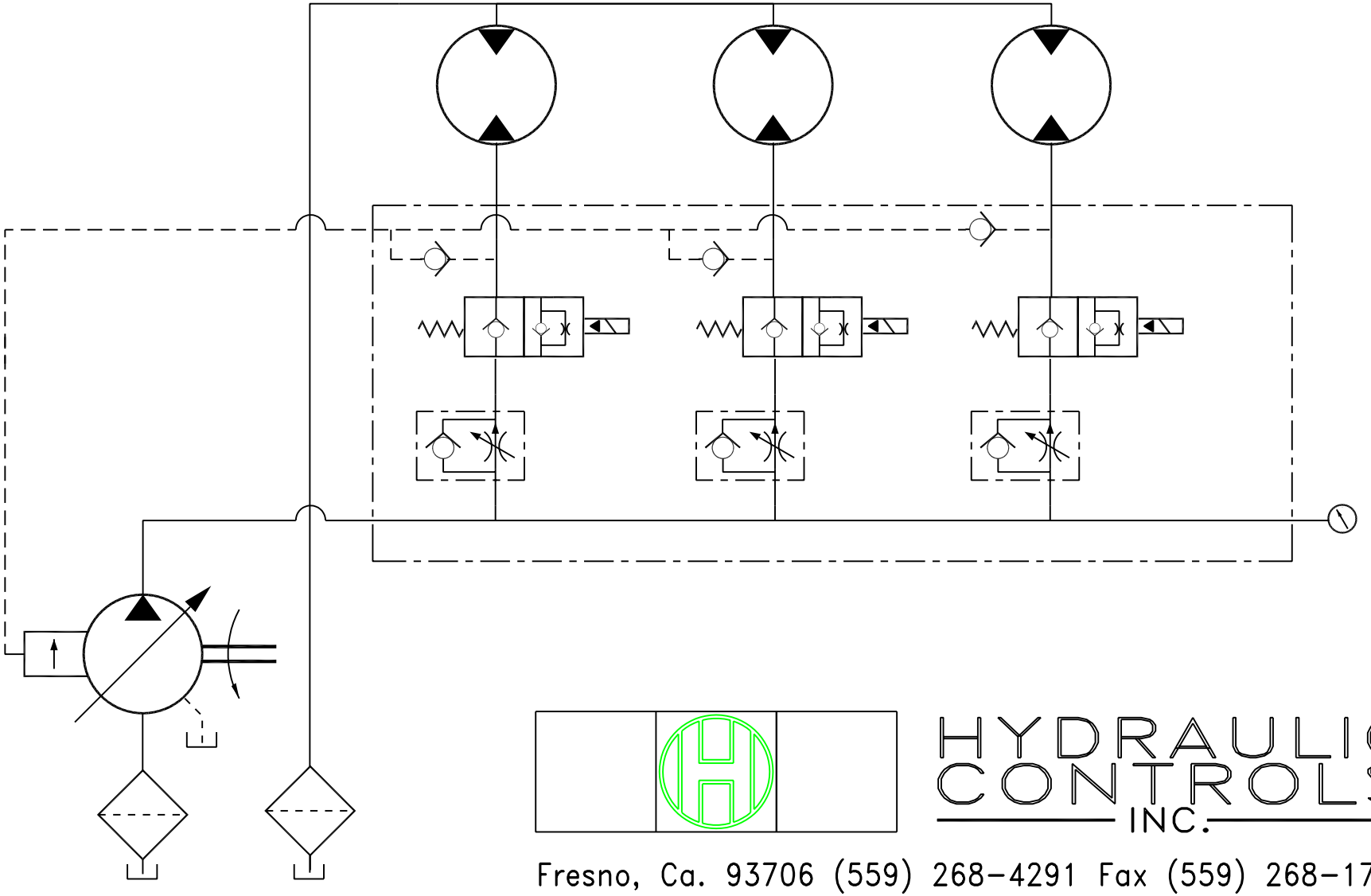

HYDRAULIC CONTROLS INC.

Fresno, Ca. 93706 (559) 268-4291 Fax (559) 268-1700

BRAND HYDRAULICS
Shipping: 2332 So 25th St (Zip 68105)
Mailing: P.O. Box #6069 (Zip 68106)
Omaha NE
Phone: (402) 344-4434
Fax: (402) 341-5419
HTTP://WWW.BRAND-HYD.COM

ISO 9001 2000 WITH DESIGN
Certificate #02.002.1

ELECTRONICALLY ADJUSTABLE PROPORTIONAL PRESSURE COMPENSATED FLOW CONTROL "EFC"

EFC

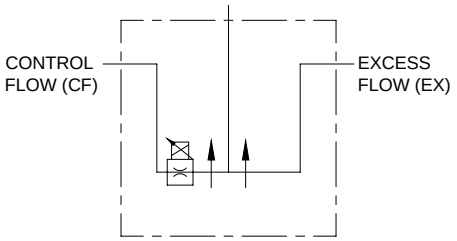

EFC WITH RELIEF

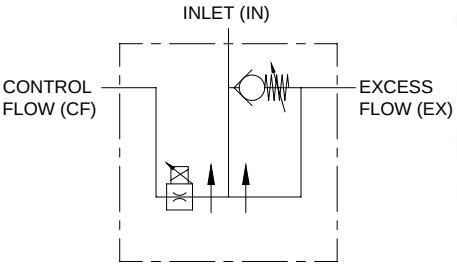

EFC12-10-12

EFC12-15-12R22

FEATURES:

- **D**IAMOND **H**ONED **S**POOL **B**ORE provides consistent spool fit with low leakage.
- **O'R**ING **P**ORTS to eliminate leakage.
- **E**VERY **EFC** IS **T**ESTED for shutoff, linearity, max. flow, crack open and pressure compensation.
- **S**TANDARD **3**-PORT allows for pressure compensated flow out of the CF and EX ports.
- **M**ANUAL **O**VERRIDE when electrical power is lost.
- **O**PTIONAL **2**-PORT allows for pressure compensated flow out of CF port.
- **O**PTIONAL **F**REE **R**EVERSE **F**LOW allows fluid to move from the CF port to the inlet.
- **O**PTIONAL **H**IGH **L**IFT **R**ELIEF.

SPECIFICATIONS:

- **See flow chart for capacity.**
- **3000 psi (207 bar) rating.**
- **Weighs 8-1/2 lbs. (3.9 kg).**
- **Standard Port size #12SAE (1-1/16 – 12).**
- **10-Micron Filtration Recommended.**
- **Pulse Frequency (90 to 115 hz).**
- **Coil**

-12 VDC standard	**(24 VDC).**
-9.6 ohms	**(48 ohms).**
-15 watts	**(15 watts).**
-1.0 amp max	**(0.5 amp max.).**

- **Response Time**
  -0.035" Standard dash pot (375 ms).
  -0.020" Dash pot (900 ms).
  -0.093 Dash pot (175 ms to 350 ms depending on flow).
- **Spool leakage (50 ml/min. @1000 psi on EX port).**

MATERIALS:

- **Ductile Cast Iron Body**
- **Heat Treated Steel Spools**
- **Buna N O'Rings**
- **Heat Treated Free Reverse Check Seat**

EFC – GENERAL INFORMATION

The Brand, electronically adjustable proportional pressure compensated flow control is an electronically controlled version of the original FC51 style flow control valve. The EFC performance as a flow control is very similar to the FC51 because they both use the same spring and compensator spool. Thus, the control flow port (CF) and the excess flow port (EX) remain usable and pressure compensated.

The main advantage of the EFC over the FC51 is that the flow can be adjusted proportionally with a solenoid instead of manually. As the current to the solenoid increases the variable orifice moves proportionally similar to positioning the rotary side lever on the manual FC's. The solenoid is connected to our EC – series controls which can be sold with the EFC. We also give the choice of a dashpot size, which allows the customer to select a valve that responds to the control box at different rates. Other options are 2-port, free reverse flow and high lift ball spring relief.

2-PORT- The 2-port (2P) option is a modified version of the standard 3-port EFC. This option lets the customer use the control flow port while the excess port is plugged. A special compensator spool was designed to eliminate hunting that can occur between pressure compensated valves and pumps. To use the EFC 2-port a pressure compensated pump is required. The 2-port can be converted to a 3-port (by removing the EX plug), but it will not have the same characteristics as the standard 3-port. (See chart on next page for 2-port EFC)

FREE REVERSE FLOW- The free reverse flow option was designed to be used primarily where cylinders and motors are needed to go in reverse. The flow can only go in reverse from controlled flow (CF) to the inlet (IN). Flow is not metered when it goes in reverse. The steel ball seat inside the compensator spool is heat treated to assure a long life.

HIGH LIFT BALL SPRING RELIEF – The high lift ball spring relief (R) reduces plumbing and provides relief protection. Once the pressure on the inlet port increases above the relief setting the relief valve opens and diverts flow to the EX port while maintaining pressure on the IN port. The EX port must be plumbed back to tank for this relief to work. This relief does not chatter and the cracking pressure from low to high flow is virtually the same. The relief is easily adjustable by simply loosening the lock nut and turning the adjusting fitting. (See relief chart on next page)

EFC – EXAMPLES OF COMMON MODEL CODES:

EFC12-10-12…….. 10 gpm 3-port with 12 volt coil
EFC12-15-12R15..... 15 gpm 3-port, 12 volt coil with 1500 psi relief
EFC12-10-122P……. 10 gpm 2-port with 12 volt coil
CEP1000……. 10 gpm 3-port with EC-12-01 control

EFC – CREATING A MODEL CODE FOR EFC'S:

E F C _ _ - _ - _ _ _

REVERSE FLOW:
C – Free reverse flow
Omit – No reverse flow

PORT SIZE:
12 - #12SAE (1-1/16 – 12)
** - Contact factory for others

FLOW SETTING:
05 – 0-5 gpm (18.9 lpm)
10 – 0-10 gpm (37.8 lpm)
15 – 0-15 gpm (56.8 lpm)
20 – 0-20 gpm (75.7 lpm)
25 – 0-25 gpm (94.6 lpm)*
30 – 0-30 gpm (113.6 lpm)*

OPTIONS:
2P – 2 port
R15 – Relief set at 1500 psi (specify pressure in 100 psi increments)*
.093 – 0.093 dashpot orifice
.020 – 0.020 dashpot orifice
Omit – No options

COIL VOLTAGE & TERMINAL:
12 – 12 volt DC
24 – 24 volt DC
PF – Weather pack, female shroud with male pin
PM – Weather pack, male tower with female pin

* - 3 port only

EFC WITH ELECTRONIC CONTROL:

C E P _ _ _ 0 0 _

REVERSE FLOW:
C – Free reverse flow
Omit – No reverse flow

CONTROLS:
D – EC-12-02 (Dashmount)
Omit – EC -12-01 (Weather proof box)

FLOW SETTING:
05 – 0-5 gpm (18.9 lpm)
10 – 0-10 gpm (37.8 lpm)
15 – 0-15 gpm (56.8 lpm)
20 – 0-20 gpm (75.7 lpm)
25 – 0-25 gpm (94.6 lpm)*
30 – 0-30 gpm (113.6 lpm)*

OPTIONS:
2P – 2 port
R15 – Relief set at 1500 psi (specify pressure in 100 psi increments)*
.093 – 0.093 dashpot orifice
.020 – 0.020 dashpot orifice
Omit – No options

* - 3 port only

EFC FLOW & SOLENOID CURRENT INFO FOR 2-PORT AND 3-PORT:

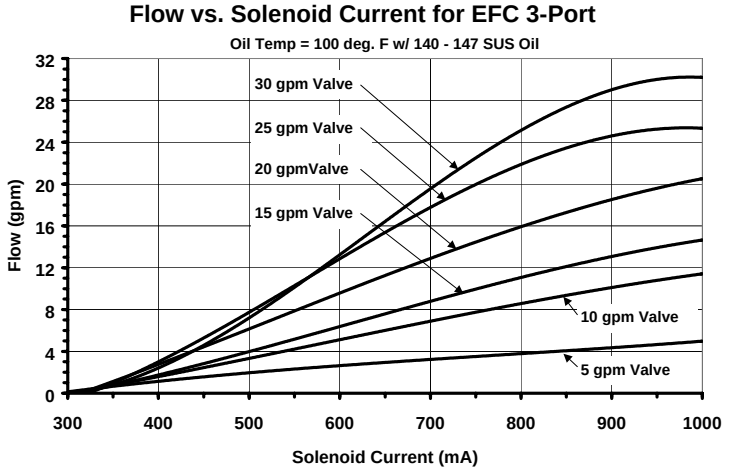

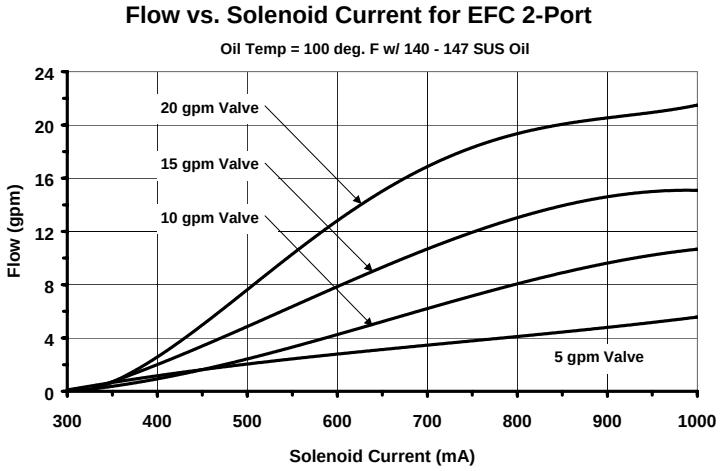

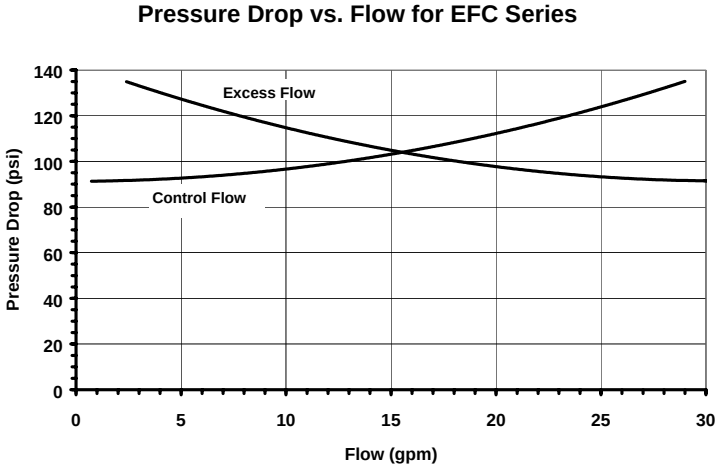

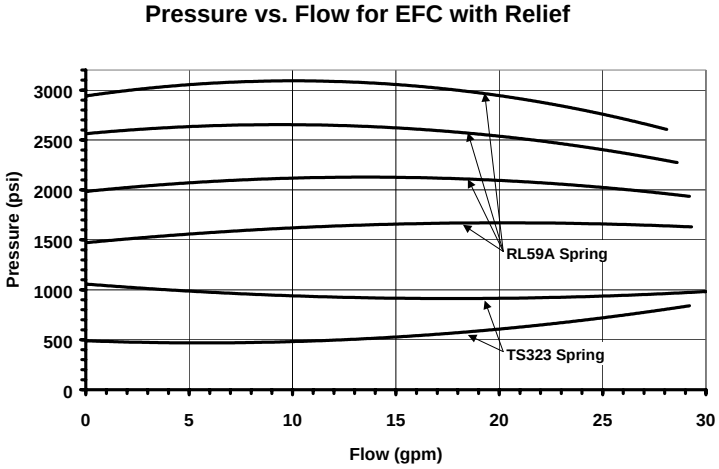

2 & 3 PORT SCHEMATIC DRAWING:

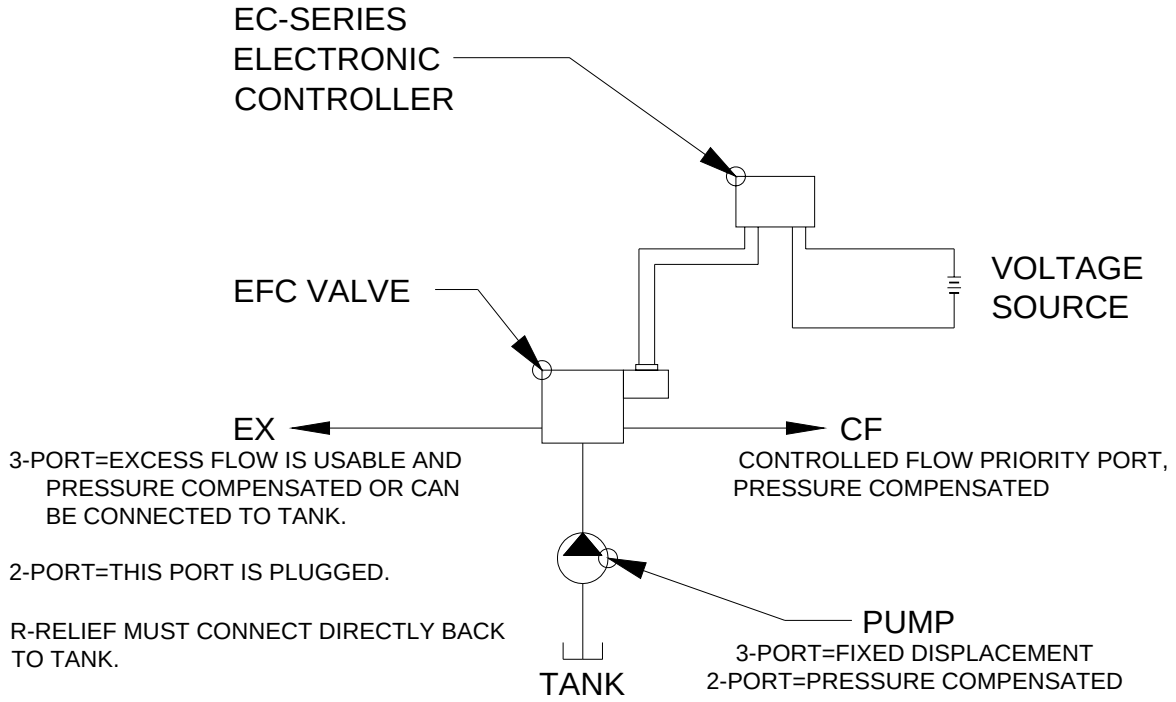

DIMENSIONAL DATA (EFC WITH RELIEF SHOWN):

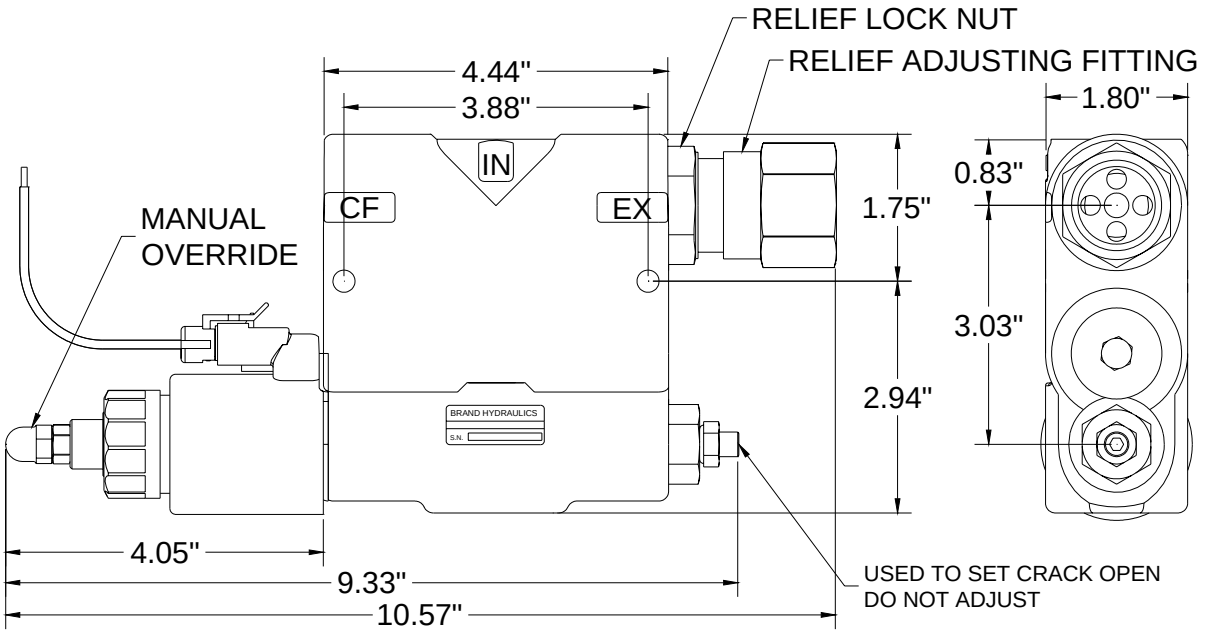

THE WIZARD LINE

3000 PSI EXTENDED DUTY

THE "WIZARD" Welded–DA–37⁰ JIC Male Ports

FEATURES:

- Honed tubing
- Chromed, ground & polished rod
- Ductile iron piston & gland
- Optional end fittings available
- Urethane u-cup and wiper
- Crown seal standard, "T" seal optional
- Wear ring on piston
- Thread in gland with o-ring to protect threads
- Standard color is gloss black

Model No.	Style	Wt.	PSI	Column Load (Lbs)	Ret (B)	Rod Dia.	A	C	D (Dia.)	E (45°)	Crosstube Adder (F)	Tang Adder (G)	Clevis Adder (G)	Ports
F150040	1 1/2 X 4	7	3000	FULL PSI	9 1/2	3/4	3/16	1	.760	22	3/4	1 3/4	1 3/4	9/16-37°
F150060	1 1/2 X 6	8	3000	FULL PSI	11 1/2	3/4	3/16	1	.760	22	3/4	1 3/4	1 3/4	9/16-37°
F150080	1 1/2 X 8	8	3000	FULL PSI	13 1/2	3/4	3/16	1	.760	22	3/4	1 3/4	1 3/4	9/16-37°
F150100	1 1/2 X 10	9	3000	4,770 LBS	15 1/2	3/4	3/16	1	.760	22	3/4	1 3/4	1 3/4	9/16-37°
F150120	1 1/2 X 12	10	3000	3,640 LBS	17 1/2	3/4	3/16	1	.760	22	3/4	1 3/4	1 3/4	9/16-37°
F150160	1 1/2 X 16	10	3000	2,315 LBS	21 1/2	3/4	3/16	1	.760	.22	3/4	1 3/4	1 3/4	9/16-37°
F150200	1 1/2 X 20	12	3000	1,600 LBS	25 1/2	3/4	3/16	1	.760	.22	3/4	1 3/4	1 3/4	9/16-37°
F150240	1 1/2 X 24	14	3000	1,175 LBS	29 1/2	3/4	3/16	1	.760	.22	3/4	1 3/4	1 3/4	9/16-37°
F175040	1 3/4 X 4	9	3000	FULL PSI	9 1/2	1	3/16	1	.760	.22	3/4	1 3/4	1 3/4	9/16-37°
F175060	1 3/4 X 6	10	3000	FULL PSI	11 1/2	1	3/16	1	.760	.22	3/4	1 3/4	1 3/4	9/16-37°
F175080	1 3/4 X 8	11	3000	FULL PSI	13 1/2	1	3/16	1	.760	.22	3/4	1 3/4	1 3/4	9/16-37°
F175100	1 3/4 X 10	12	3000	FULL PSI	15 1/2	1	3/16	1	.760	.22	3/4	1 3/4	1 3/4	9/16-37°
F175120	1 3/4 X 12	13	3000	FULL PSI	17 1/2	1	3/16	1	.760	.22	3/4	1 3/4	1 3/4	9/16-37°
F175160	1 3/4 X 16	15	3000	7,120 LBS	21 1/2	1	3/16	1	.760	.22	3/4	1 3/4	1 3/4	9/16-37°
F175200	1 3/4 X 20	17	3000	4,935 LBS	25 1/2	1	3/16	1	.760	.22	3/4	1 3/4	1 3/4	9/16-37°
F175240	1 3/4 X 24	20	3000	3,620 LBS	29 1/2	1	3/16	1	.760	.22	3/4	1 3/4	1 3/4	9/16-37°
F200040	2 X 4	12	3000	FULL PSI	9 1/2	1 1/8	3/16	1	.760	.25	3/4	1 3/4	1 3/4	9/16-37°
F200060	2 X 6	13	3000	FULL PSI	11 1/2	1 1/8	3/16	1	.760	.25	3/4	1 3/4	1 3/4	9/16-37°
F200080	2 X 8	14	3000	FULL PSI	13 1/2	1 1/8	3/16	1	.760	.25	3/4	1 3/4	1 3/4	9/16-37°
F200100	2 X 10	15	3000	FULL PSI	15 1/2	1 1/8	3/16	1	.760	.25	3/4	1 3/4	1 3/4	9/16-37°
F200120	2 X 12	17	3000	FULL PSI	17 1/2	1 1/8	3/16	1	.760	.25	3/4	1 3/4	1 3/4	9/16-37°
F200160	2 X 16	18	3000	FULL PSI	21 1/2	1 1/8	3/16	1	.760	.25	3/4	1 3/4	1 3/4	9/16-37°
F200200	2 X 20	22	3000	7,855 LBS	25 1/2	1 1/8	3/16	1	.760	.25	3/4	1 3/4	1 3/4	9/16-37°
F200240	2 X 24	24	3000	5,760 LBS	29 1/2	1 1/8	3/16	1	.760	.25	3/4	1 3/4	1 3/4	9/16-37°
F200300	2 X 30	28	3000	3,900 LBS	35 1/2	1 1/8	3/16	1	.760	.25	3/4	1 3/4	1 3/4	9/16-37°
F225040	2 1/4 X 4	14	3000	FULL PSI	9 1/2	1 1/4	3/16	1	.760	.25	3/4	1 3/4	1 3/4	9/16-37°
F225060	2 1/4 X 6	15	3000	FULL PSI	11 1/2	1 1/4	3/16	1	.760	.25	3/4	1 3/4	1 3/4	9/16-37°
F225080	2 1/4 X 8	16	3000	FULL PSI	13 1/2	1 1/4	3/16	1	.760	.25	3/4	1 3/4	1 3/4	9/16-37°
F225100	2 1/4 X 10	18	3000	FULL PSI	15 1/2	1 1/4	3/16	1	.760	.25	3/4	1 3/4	1 3/4	9/16-37°
F225120	2 1/4 X 12	19	3000	FULL PSI	17 1/2	1 1/4	3/16	1	.760	.25	3/4	1 3/4	1 3/4	9/16-37°
F225160	2 1/4 X 16	22	3000	FULL PSI	21 1/2	1 1/4	3/16	1	.760	.25	3/4	1 3/4	1 3/4	9/16-37°
F225200	2 1/4 X 20	25	3000	11,900 LBS	25 1/2	1 1/4	3/16	1	.760	.25	3/4	1 3/4	1 3/4	9/16-37°
F225240	2 1/4 X 24	28	3000	8,730 LBS	29 1/2	1 1/4	3/16	1	.760	.25	3/4	1 3/4	1 3/4	9/16-37°
F225300	2 1/4 X 30	33	3000	5,912 LBS	35 1/2	1 1/4	3/16	1	.760	.25	3/4	1 3/4	1 3/4	9/16-37°
F250040	2 1/2 X 4	15	3000	FULL PSI	9 1/2	1 3/8	3/16	1	.760	.31	3/4	1 3/4	1 3/4	9/16-37°
F250060	2 1/2 X 6	17	3000	FULL PSI	11 1/2	1 3/8	3/16	1	.760	.31	3/4	1 3/4	1 3/4	9/16-37°
F250080	2 1/2 X 8	18	3000	FULL PSI	13 1/2	1 3/8	3/16	1	.760	.31	3/4	1 3/4	1 3/4	9/16-37°
F250100	2 1/2 X 10	20	3000	FULL PSI	15 1/2	1 3/8	3/16	1	.760	.31	3/4	1 3/4	1 3/4	9/16-37°
F250120	2 1/2 X 12	21	3000	FULL PSI	17 1/2	1 3/8	3/16	1	.760	.31	3/4	1 3/4	1 3/4	9/16-37°
F250160	2 1/2 X 16	25	3000	FULL PSI	21 1/2	1 3/8	3/16	1	.760	.31	3/4	1 3/4	1 3/4	9/16-37°
F250200	2 1/2 X 20	29	3000	FULL PSI	25 1/2	1 3/8	3/16	1	.760	.31	3/4	1 3/4	1 3/4	9/16-37°
F250240	2 1/2 X 24	32	3000	12,705 LBS	29 1/2	1 3/8	3/16	1	.760	.31	3/4	1 3/4	1 3/4	9/16-37°
F250300	2 1/2 X 30	37	3000	8,605 LBS	35 1/2	1 3/8	3/16	1	.760	.31	3/4	1 3/4	1 3/4	9/16-37°
F250360	2 1/2 X 36	43	3000	6,212 LBS	41 1/2	1 3/8	3/16	1	.760	.31	3/4	1 3/4	1 3/4	9/16-37°
F275040	2 3/4 X 4	16	3000	FULL PSI	9 1/2	1 1/2	3/16	1	.760	.38	3/4	1 3/4	1 3/4	9/16-37°
F275060	2 3/4 X 6	18	3000	FULL PSI	11 1/2	1 1/2	3/16	1	.760	.38	3/4	1 3/4	1 3/4	9/16-37°
F275080	2 3/4 X 8	20	3000	FULL PSI	13 1/2	1 1/2	3/16	1	.760	.38	3/4	1 3/4	1 3/4	9/16-37°
F275100	2 3/4 X 10	22	3000	FULL PSI	15 1/2	1 1/2	3/16	1	.760	.38	3/4	1 3/4	1 3/4	9/16-37°
F275120	2 3/4 X 12	24	3000	FULL PSI	17 1/2	1 1/2	3/16	1	.760	.38	3/4	1 3/4	1 3/4	9/16-37°
F275160	2 3/4 X 16	28	3000	FULL PSI	21 1/2	1 1/2	3/16	1	.760	.38	3/4	1 3/4	1 3/4	9/16-37°
F275200	2 3/4 X 20	32	3000	FULL PSI	25 1/2	1 1/2	3/16	1	.760	.38	3/4	1 3/4	1 3/4	9/16-37°
F275240	2 3/4 X 24	36	3000	FULL PSI	29 1/2	1 1/2	3/16	1	.760	.38	3/4	1 3/4	1 3/4	9/16-37°
F275300	2 3/4 X 30	42	3000	12,120 LBS	35 1/2	1 1/2	3/16	1	.760	.38	3/4	1 3/4	1 3/4	9/16-37°
F275360	2 3/4 X 36	48	3000	8,750 LBS	41 1/2	1 1/2	3/16	1	.760	.38	3/4	1 3/4	1 3/4	9/16-37°

PRINCE MANUFACTUR NG CORPORATION/WORLD HEADQUARTERS • P.O. BOX 7000 • NORTH SIOUX CITY, SOUTH DAKOTA 57049-7000
URL: www princehyd.com • E-MAIL: prince@princehyd.com • PHONE (605) 235-1220 • FAX (605) 235-1082
O.E M. CUSTOMER SERVICE: (605) 235-1220 • FAX (605) 235-1082 DISTR BUTOR CUSTOMER SERVICE: PHONE (605) 235-1220 • FAX (605) 217-6300

THE WIZARD LINE

3000 PSI EXTENDED DUTY

BASE END FITTINGS

BASE END CROSSTUBE

MODEL	F	LENGTH
F150	3/4	2 1/4
F175	3/4	2 1/2
F200	3/4	2 3/4
F225	3/4	3
F250	3/4	3 1/4
F275	3/4	3 1/2

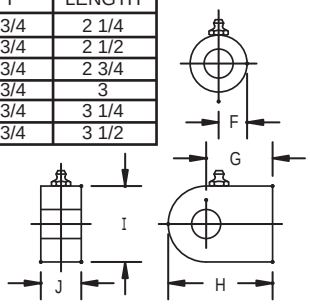

BASE END TANG DIMENSIONS

MODEL	G	H	I	J
F150	1 3/4	2 5/8	1 1/2	3/4
F175	1 3/4	2 5/8	1 1/2	3/4
F200	1 3/4	2 3/4	2	1
F225	1 3/4	2 3/4	2	1
F250	1 3/4	2 7/8	2 1/4	1
F275	1 3/4	2 7/8	2 1/4	1

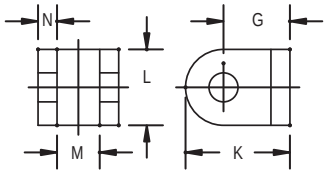

BASE END CLEVIS DIMENSIONS

MODEL	G	K	L	M	N
F150	1 3/4	2 5/8	1 1/2	7/8	3/8
F175	1 3/4	2 5/8	1 1/2	7/8	3/8
F200	1 3/4	2 3/4	2	1 1/8	1/2
F225	1 3/4	2 3 4	2	1 8	1/2
F250	1 3/4	2 3/4	2	1 1/8	1/2
F275	1 3/4	2 3/4	2	1 1/8	1/2

BASIC "WIZARD" CYLINDER

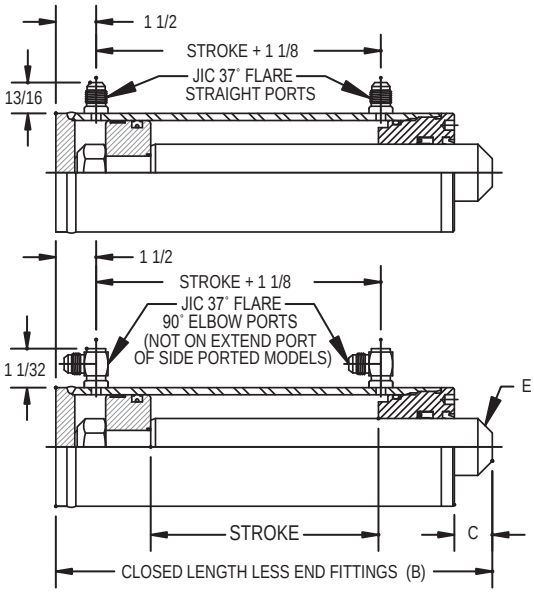

IMPORTANT: EXTEND ROD BEFORE WELDING ON END FITTINGS SEAL DAMAGE WILL OCCUR FROM EXCESSIVE HEAT

ROD END FITTINGS

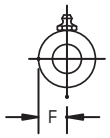

ROD END CROSSTUBE

MODEL	F	LENGTH
F150	3/4	1 1/2
F175	3/4	1 1/2
F200	3/4	1 1/2
F225	3/4	2
F250	3/4	2
F275	3/4	2

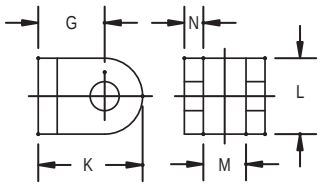

ROD END CLEVIS DIMENSIONS

MODEL	G	K	L	M	N
F150	1 3/4	2 5/8	1 1/2	7/8	3/8
F175	1 3/4	2 5/8	1 1/2	7/8	3/8
F200	1 3/4	2 3/4	2	1 1/8	1/2
F225	1 3/4	2 3/4	2	1 1/8	1/2
F250	1 3/4	2 3/4	2	1 1/8	1/2
F275	3/4	2 3/4	2	1 1/8	1/2

MODEL NUMBER SYSTEM

F 2 2 5 2 4 3 C S S T X C

ROD END FITTING: C=CLEVIS
X=CROSSTUBE
N=BLANK

BA E E D F TT NG C CLEVIS
X=CROSSTUBE
T=TANG
N=BLANK

ALL PORTS ARE JIC 37° FLARE
#6 MALE THREADS ARE STANDARD

BASE MODEL NUMBER IDENTIFIES BORE SIZE
EXAMPLE: 225 IS 2 1/4 BORE

PORT LOCATION:
T=TOP PORT - PERPENDICULAR TO PIN HOLE
S=SIDE PORT - IN LINE WITH PIN HOLE

STROKE. THE FIRST TWO DIGITS ARE INCHES. THE LAST DIGIT IS 1/8'S OF AN INCH (CUSTOM MODELS ONLY) *.
EXAMPLE: 243 IS 24 3/8" STROKE

RETRACT PORT:
S=STRAIGHT
E=90° ELBOW - AVA LABLE ON TOP AND SIDE PORTED MODELS

PISTON SEAL:
C=CROWN SEAL
H=HIGH PSI TEFLON SEAL
T="T" SEAL

EXTEND PORT:
S=STRAIGHT
E=90° ELBOW - AVAILABLE ON TOP PORTED MODELS ONLY

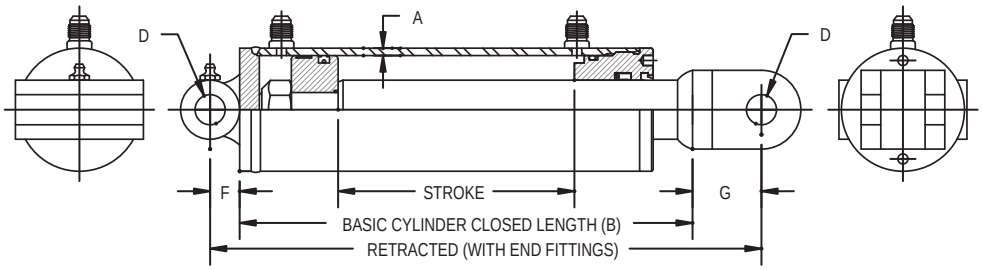

* CUSTOM STROKE LENGTHS ARE AVAILABLE. MINIMUM ORDER MAY BE REQUIRED. CONTACT YOUR SALES REPRESESTATIVE WITH YOUR REQUIREMENTS

PRINCE MANUFACTUR NG CORPORATION/WORLD HEADQUARTERS • P.O. BOX 7000 • NORTH SIOUX CITY, SOUTH DAKOTA 57049-7000
URL: www princehyd.com • E-MAIL: prince@princehyd.com • PHONE (605) 235-1220 • FAX (605) 235-1082
O.E.M. CUSTOMER SERVICE: (605) 235-1220 • FAX (605) 235-1082 DISTRIBUTOR CUSTOMER SERVICE: PHONE (605) 235-1220 • FAX (605) 217-6300

CATC 4-07-12-01

SEE PAGE 2 OF THE STANDARD PRODUCT PRICE LIST FOR PRICING

WR

OVERVIEW

The WR Series motor incorporates the latest advances for smooth performance, efficiency and durability. It features an optimized Roller Stator® geometry with seven precision rollers to eliminate sliding friction and provide rolling contact between the rotor and stator. This increases motor efficiency. A three-zone spool valve, integral check valves and a provision for a case drain reduce pressure on internal seals to improve product life. A wide variety of mounting, shaft, motor displacement and porting options are available to meet all application needs.

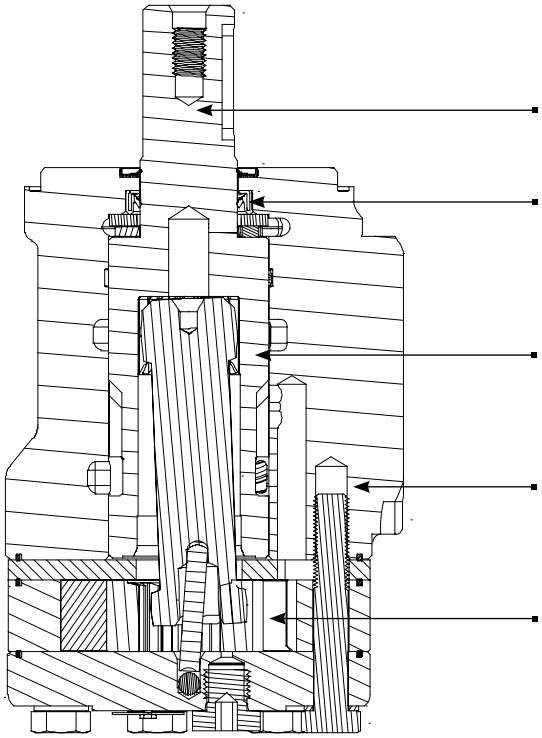

KEY FEATURES

Variety of Mounts and Shafts provides flexibility in application design.

High Pressure Shaft Seal offers superior seal life and performance.

Spool Valve Design gives superior performance and smooth operation over a wide speed and torque range.

Built In Check Valves (Not Shown) in the housing offers versatility and increased seal life.

Optimized Roller Stator® geometry provides a smooth running high efficient product.

SPECIFICATIONS

Intermittent Ratings - 10% of Operation **Peak Ratings** - 1% of Operation

CODE	Displacement cc [in^3/rev]	Max. Speed rpm		Max. Flow lpm [gpm]		Max. Torque Nm [lb-in]		Max. Pressure bar [psi]		
		cont.	inter.	cont.	inter.	cont.	inter.	cont.	inter.	peak
040	40 [2.5]	1116	1515	45 [12]	61 [16]	93 [823]	123 [1088]	155 [2250]	207 [3000]	224 [3250]
060	59 [3.6]	890	1142	53 [14]	68 [18]	138 [1221]	172 [1522]	155 [2250]	207 [3000]	224 [3250]
070	71 [4.3]	865	1078	61 [16]	76 [20]	176 [1558]	207 [1832]	172 [2500]	207 [3000]	241 [3500]
090	88 [5.4]	691	864	61 [16]	76 [20]	222 [1965]	263 [2327]	172 [2500]	207 [3000]	241 [3500]
100	100 [6.1]	610	760	61 [16]	76 [20]	246 [2177]	289 [2558]	172 [2500]	207 [3000]	241 [3500]
115	113 [6.9]	539	672	61 [16]	76 [20]	284 [2513]	327 [2894]	172 [2500]	207 [3000]	241 [3500]
130	129 [7.9]	472	588	61 [16]	76 [20]	316 [2797]	375 [3319]	172 [2500]	207 [3000]	241 [3500]
160	160 [9.8]	379	469	61 [16]	76 [20]	400 [3540]	454 [4018]	172 [2500]	207 [3000]	241 [3500]
200	198 [12.1]	308	384	61 [16]	76 [20]	462 [4088]	544 [4814]	172 [2500]	207 [3000]	241 [3500]
240	236 [14.4]	249	315	61 [16]	76 [20]	548 [4850]	642 [5682]	172 [2500]	207 [3000]	224 [3250]
320	322 [19.6]	188	235	61 [16]	76 [20]	518 [4584]	690 [6106]	121 [1750]	172 [2500]	190 [2750]
400	400 [24.4]	152	190	61 [16]	76 [20]	551 [4873]	698 [6177]	104 [1500]	138 [2000]	155 [2250]

Lines

	Line, Working (Main)
	Line, Pilot or Drain
	Flow Direction Hydraulic Pneumatic
	Lines Crossing
	Lines Joining
	Lines With Fixed Restriction
	Line, Flexible
	Station, Testing, Measurement or Power Take-Off
	Variable Component (run arrow through symbol at 45°)
	Pressure Compensated Units (Arrow parallel to short side of symbol)
	Temperature Cause or Effect
Reservoir	
	Vented
	Pressurized
Line, To Reservoir	
	Above Fluid Level
	Below Fluid Level
	Vented Manifold

Hydraulic Pumps

	Fixed Displacement
	Variable Displacement

Motors and Cylinders

Hydraulic	
	Fixed Displacement
	Variable Displacement
	Cylinder, Single-Acting
Cylinder, Double-Acting	
	Single End Rod
	Double End Rod
	Adjustable Cushion Advance Only
	Differential Piston

Miscellaneous Units

	Electric Motor
	Accumulator, Spring Loaded
	Accumulator, Gas Charged
	Heater

Miscellaneous Units

	Cooler
	Temperature Controller
	Filter, Strainer
	Pressure Switch
	Pressure Indicator
	Temperature Indicator
	Component Enclosure
	Direction of Shaft Rotation (assume arrow on near side of shaft)

Methods of Operation

	Spring
	Manual
	Push Button
	Push-Pull Lever
	Pedal or Treadle
	Mechanical
	Detent
	Pressure Compensated

HYDRAULIC SYMBOLS

Methods of Operation

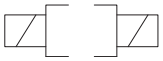	Solenoid, Single Winding
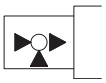	Servo Control
Pilot Pressure	
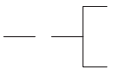	Remote Supply
	Internal Supply

Valves

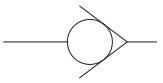	Check
	On-Off (manual shut-off)
	Pressure Relief
	Pressure Reducing
	Flow Control, Adjustable - Non-Compensated
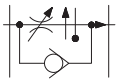	Flow Control, Adjustable (Temperature and pressure compensated)
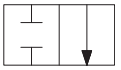	Two-Position Two Connection
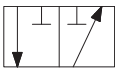	Two-Position Three Connection
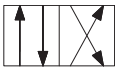	Two-Position Four Connection
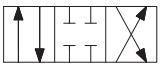	Three-Position Four Connection
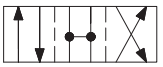	Two-Position In Transition
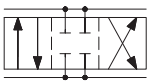	Valves Capable of Infinite Positioning (Horizontal bars indicate infinite positioning ability)

Color Code for Fluid Power Schematic Drawings

Black	Intensified Pressure
Red	Supply
Intermittent Red	Charging Pressure
Intermittent Red	Reduced Pressure
Intermittent Red	Pilot Pressure
Yellow	Metered Flow
Blue	Exhaust
Green	Intake
Green	Drain
Blank	Inactive

Call your local Applied® service center to order at **1-866-351-3464** or visit us online at **Applied.com**

Common Hydraulic Formulas

Torque and horsepower relations

T = HP x 5252 ÷ RPM
HP = T x RPM ÷ 5252
Torque values are in foot pounds

Hydraulic (fluid power) horsepower

HP = PSI x GPM ÷ 1714
PSI is gauge pressure in pounds per square inch; GPM is oil flow in gallons per minute

Velocity of oil flow in pipe

V = GPM x 0.3208 ÷ A
V is oil velocity in feet per second; GPM is flow in gallons per minute; A is inside area of pipe in square inches

Charles' Law for behavior of gases

P1V1 = P2V2 or T1P2 = T2P1
T1, P1 and V1 are initial temperature, pressure, and volume, and T2, P2, and V2 are final conditions

Hydraulic cyl. piston travel speed

S = CIM ÷ A
S is piston travel speed, inches per minute; CIM is oil flow into cylinder, cubic inches per minute; A is piston area in square inches

Force or thrust of any cylinder

F = A x PSI
F is force or thrust, in pounds; A is piston net area in square inches; PSI is gauge pressure

Circle formulas

Area = πr2, or πD2 ÷ 4
Circumference = 2πr, or πD
r is radius; D is diameter; π = 3.14

Side load on pump or motor shaft

F = (HP x 63024) ÷ (RPM x R)
F is the side load, in pounds, against shaft; R is the pitch radius, in inches, of sheave on pump shaft; HP is driving power applied to shaft

Effective force of a cylinder working at an angle to direction of the load travel

F = T x sinA
T is the total cylinder force, in pounds; F is the part of the force which is effective, in pounds; A is the least angle, in degrees, between cylinder axis and load direction

Burst pressure of pipe or tubing

P = 2t x S ÷ O
P is burst pressure in PSI; t is wall thickness, in inches; S is tensile strength of material in PSI; O is outside diameter, in inches

Relationship between displacement and torque of a hydraulic motor

T = D x PSI ÷ 24π
T is torque in foot-lbs; D is displacement in cubic inches per revolution; PSI is pressure difference across motor; π = 3.14

Hydraulic Motor Speed

Speed=F / (D / 231)

Speed is in RPM; D is displacement in cubic inches per revolution; F is Flow in GPM

Conversions

1 gallon=231 cubic inches

Students please affix one of the self adhesive labels from your sheet of identification labels to this page. Make sure the edges of the label are within the boundaries of this box and that the affixed label does not obscure any other parts of this page. If you do not have a self adhesive identification label, please complete the following information.

Your Name: _-

_____

Write your name as it appears on your name badge.

Your Participant Code:

			0	3				0	

Write your participant code as it appears on your name badge.

Two letter state abbreviation.

State code (0301, 0302, …… to 0350)

Team member number (01, 02, 03, or 04)

Students please do not write or mark within this box.

Judges, after this skill sheet has been scored and double checked, write the total score for this activity in the blank below.

Skill Activity Score: _____

Judge's Initials: _____

2008 National FFA Agricultural Mechanics Career Development Event

Environment and Natural Resource Systems

INFORMATION:

This activity is worth a maximum of 30 points. You will have 20 minutes to complete the project. Read through the instructions carefully before you begin. Leaders are available to answer any questions that you may have. (If you don't know if it is OK- Ask before you do it!)

INSTRUCTIONS:

- Use the formulae and information provided to answer the following questions.
- Round your answers to one decimal place.
- Use charts attached as necessary.

FORMULAE:

Circumference of circle = $\pi \cdot d$ (pie = 3.14, d = diameter)

Area of a circle = $\pi \cdot r^2$ (pie = 3.14, r = radius)

Volume of a cylinder = $\pi \cdot r^2 \cdot$ height (pie = 3.14, r = radius, height = length of cylinder)

CONVERSIONS:

1 cubic foot = 7.48 gallons
1 gallon = 0.133 cubic feet
1 acre = 43,560 square feet
1 acre-feet of water = 325,851 gallons
1 psi = 2.31 feet of head
1 foot of head = 0.433 psi

QUESTIONS:

1. A fertilizer truck is hauling 750 gallons of liquid nitrogen. How many cubic feet of liquid is the truck hauling?

_____ cubic feet 3 pts _____

2. How many gallons of water would a rectangular-shaped pond hold based on the following dimensions?

depth= 15 feet, width = 200 feet, length = 400 feet.

_____ Gallons 3 pts _____

3. A rice farmer wants to flood a 75 acre field with 6 inches of water. How many acre-feet of water would he need to purchase?

_____ Acre-feet 3 pts _____

4. A rice farmer owns two pumps with a flow rate of 1,200 gallons per minute each. How many hours would it take to flood a 120 acre field with 5 inches of water?

_____ hours 3 pts _____

5. A pond with a surface area of 2.5 acres received a 2-inch deep rainfall. How many gallons of water were added to the pond?

_____ Gallons 3 pts _____

6. A 2-inch diameter plastic pipe has a flow rate of 30 gallons per minute (GPM). What is the friction loss in feet of head per 100 feet of pipe?

_____ feet of head 3 pts _____

7. A 4 inch diameter plastic pipe has a flow rate of 350 gallons per minute. What is the total friction loss if the pipe is 1,700 feet long?

_____ feet of head 3 pts _____

Single Head Irrigation System

A ¾ inch diameter plastic pipe with a length of 100 feet supplies water for a single sprinkler head. The flow rate is 5 gallons per minute. The supply pressure is 17 feet of head. The sprinkler head requires a pressure of 12 feet of head to operate correctly.

8. What is the pressure loss due to only the pipe?

_____ feet of head 3 pts _____

9. What is the pressure loss due to only the fittings?

_____ feet of head 3 pts _____

10. Given the conditions, will the sprinkler work correctly?

Circle One: YES NO 3 pts _____

FRICTION LOSS CHART

FRICTION LOSS PER 100 FEET OF PIPE OF PLASTIC PIPE

	PIPE DIAMETER																			
	1/2 in.		3/4 in.		1 in.		1 1/4 in.		1 1/2 in.		2 in.		2 1/2 in.		3 in.		4 in.		5 in.	
GPM	SCH 40	SCH 80	SCH 40	SCH 80	SCH 40	SCH 80	SCH 40	SCH 80	SCH 40	SCH 80	SCH 40	SCH 80	SCH 40	SCH 80	SCH 40	SCH 80	SCH 40	SCH 80	SCH 40	SCH 80
1	2.08	4.02	0.51	0.86																
2	4.16	8.03	1.02	1.72	0.55	0.88	0.14	0.21	0.07	0.10										
5	23.44	45.23	5.73	9.67	1.72	2.75	0.44	0.66	0.22	0.30	0.066	0.10	0.038	0.05	0.015	0.02				
7	43.06	83.07	10.52	17.76	3.17	5.04	0.81	1.21	0.38	0.55	0.11	0.15	0.051	0.07	0.021	0.028				
10	82.02	-	20.04	33.84	6.02	9.61	1.55	2.30	0.72	1.04	0.21	0.29	0.09	0.12	0.03	0.04				
15	-	-	42.46	71.70	12.77	20.36	3.28	4.87	1.53	2.20	0.45	0.62	0.19	0.26	0.07	0.09				
20	-	-	72.34	-	21.75	34.68	5.59	8.30	2.61	3.75	0.76	1.06	0.32	0.44	0.11	0.15	0.03	0.04		
25	-	-	-	-	32.88	52.43	8.45	12.55	3.95	5.67	1.15	1.60	0.49	0.67	0.17	0.22	0.04	0.06		
30	-	-	-	-	46.08	73.48	11.85	17.59	5.53	7.95	1.62	2.25	0.68	0.94	0.23	0.31	0.06	0.08	0.02	0.03
35	-	-	-	-	-	-	15.76	23.40	7.36	10.58	2.15	2.99	0.91	1.25	0.31	0.42	0.08	0.11	0.03	0.04
40	-	-	-	-	-	-	20.18	29.97	9.43	13.55	2.75	3.83	1.16	1.60	0.40	0.54	0.11	0.14	0.03	0.04
45	-	-	-	-	-	-	25.10	37.27	11.73	16.85	3.43	4.76	1.44	1.99	0.50	0.67	0.13	0.17	0.04	0.06
50	-	-	-	-	-	-	30.51	45.30	14.25	20.48	4.16	5.79	1.75	2.42	0.60	0.81	0.16	0.21	0.05	0.07
60	-	-	-	-	-	-	-	-	19.98	28.70	5.84	8.12	2.46	3.39	0.85	1.14	0.22	0.30	0.07	0.10
70	-	-	-	-	-	-	-	-	-	-	7.76	10.80	3.27	4.51	1.13	1.51	0.30	0.39	0.10	0.13
75	-	-	-	-	-	-	-	-	-	-	8.82	12.27	3.71	5.12	1.28	1.72	0.34	0.45	0.11	0.14
80	-	-	-	-	-	-	-	-	-	-	9.94	13.83	4.19	5.77	1.44	1.94	0.38	0.50	0.13	0.16
90	-	-	-	-	-	-	-	-	-	-	12.37	17.20	5.21	7.18	1.80	2.41	0.47	0.63	0.16	0.20
100	-	-	-	-	-	-	-	-	-	-	15.03	20.90	6.33	8.72	2.18	2.93	0.58	0.76	0.19	0.24
125	-	-	-	-	-	-	-	-	-	-	-	-	9.58	13.21	3.31	4.43	0.88	1.16	0.29	0.37
150	-	-	-	-	-	-	-	-	-	-	-	-	13.41	18.48	4.63	6.20	1.22	1.61	0.40	0.52
175	-	-	-	-	-	-	-	-	-	-	-	-	-	-	6.16	8.26	1.63	2.15	0.54	0.69
200	-	-	-	-	-	-	-	-	-	-	-	-	-	-	7.88	10.57	2.08	2.75	0.69	0.88
250	-	-	-	-	-	-	-	-	-	-	-	-	-	-	11.93	16.00	3.15	4.16	1.05	1.34
300	-	-	-	-	-	-	-	-	-	-	-	-	-	-	-	-	4.41	5.83	1.46	1.87
350	-	-	-	-	-	-	-	-	-	-	-	-	-	-	-	-	5.87	7.76	1.95	2.49
400	-	-	-	-	-	-	-	-	-	-	-	-	-	-	-	-	7.52	9.93	2.49	3.19
450	-	-	-	-	-	-	-	-	-	-	-	-	-	-	-	-	-	-	3.09	3.97
500	-	-	-	-	-	-	-	-	-	-	-	-	-	-	-	-	-	-	3.76	4.82

THIS CHART GIVES FRICTION LOSSES FOR YOUR GIVEN FLOW RATE PER 100 FEET OF PIPE. EXAMPLE: IF YOU HAVE 60 GALLONS PER MINUTE AND YOU'RE USING 2 INCH SCHEDULE 80 PIPE AND YOU HAVE A 160 FEET OF PIPE, YOUR FRICTION LOSS IS 8.12 x 1.6 = 12.99 FEET.

NOTE: IT IS BEST TO KEEP YOUR FRICTION LOSS (PER 100 FEET OF PIPE) TO LESS THAN 5 FEET.

FRICTION LOSS IN PVC FITTINGS IN EQUIVALENT FEET OF STRAIGHT PIPE

NORMAL PIPE SIZE (IN)	1/2"	3/4"	1"	1 1/4"	1 1/2"	2"	2 1/2"	3"	4"
90 ELBOW, STANDARD	1.5	2.0	2.25	4.0	4.0	6.0	8.0	8.0	12.0
45 ELBOW, STANDARD	0.75	1.0	1.4	1.75	2.0	2.5	3.0	4.0	5.0
INSERT COUPLING	0.5	0.75	1.0	1.25	1.5	2.0	3.0	3.0	4.0
GATE VALUE	.3	.4	.6	.8	1.0	1.5	1.6	2.0	3.0
MALE-FEMALE ADAPTERS	1.0	1.5	2.0	2.75	3.5	4.5	-	6.5	9.0
TEE - FLOW through RUN	1.0	1.4	1.7	2.3	2.7	4.3	5.1	6.3	8.3
TEE - FLOW THROUGH BRANCH	4.0	5.0	6.0	7.0	8.0	12.0	15.0	16.0	22.0

Students please affix one of the self adhesive labels from your sheet of identification labels to this page. Make sure the edges of the label are within the boundaries of this box and that the affixed label does not obscure any other parts of this page. If you do not have a self adhesive identification label, please complete the following information. **Your Name:** _____ *Write your name as it appears on your name badge.* **Your Participant Code:** [ ][ ][■][0][3][ ][ ][■][0][ ] *Write your participant code as it appears on your name badge.*	**Students please do not write or mark within this box.** **Skill Activity Score:_____** **Judge's Initials: _____**

2008 NATIONAL FFA AGRICULTURAL MECHANICS CAREER DEVELOPMENT EVENT
STRUCTURAL SYSTEMS

Please read and follow directions carefully! Use your time wisely!

GENERAL INFORMATION / DIRECTIONS:
Assume you are repairing a part for a round baler. While repairing the part you are required to weld pipe to plate. This exercise represents this requisite skill.

PROCEDURES:

1. Safety: Because you are working in a welding area, safety glasses must be worn at all times. A serviceable welding helmet with a protective lens (shade ten minimum) must be worn while welding. All skin must be covered while welding for radiation protection.
2. Follow the provided plans to assemble and weld the required piece utilizing the flux cored arc welding (FCAW) process.
3. Mark your completed assembly and turn it in to a contest official with this sheet.

Activity Score Sheet

Graded Item	Possible	Score
1. Correct assembly	3	_____
2. Bead width	3	_____
3. Bead contour	3	_____
4. Bead uniformity	3	_____
5. Absence of undercut	3	_____
6. Equal bead width on both surfaces	3	_____
7. Tie-in of beads	3	_____
8. Dye penetrant test	6	_____
9. Safety	3	_____

TOTAL POINTS: (Double check point total and enter on front) 30 _____

Teachers' Workroom

National FFA Agricultural Mechanics Career Development Event Update

2006-2008 Event Superintendent - Dr. Steven Poe

This web site will be updated as information becomes available throughout the year. Any updates made between August and the date of the National FFA Convention will appear in red to highlight the change. If you find a mistake or an electronic reference does not work, please send an email to the appropriate contest associate superintendent and the superintendent.

last updated 7/19/08

Introduction

The changing workplace in America has caused education institutions to reassess the strategies followed when preparing students for their future. To be competitive in the job market a student must be able to access and apply a broad range of information through the use of computers and networks. Today's students must be competent in the management of their resources and they must develop strong interpersonal skills. Students must understand and have experience with complex systems and a variety of technologies.

To effectively prepare students for the agricultural mechanics work environment, the students must acquire knowledge and skills, and develop the ability to solve difficult problems. The agricultural mechanics professional of tomorrow will perform these skills while working with others and apply these skills to a range of systems and technologies that interrelate. The agricultural mechanics profession requires employees to do much more than perform tasks.

The National FFA Agricultural Mechanics Career Development Event is designed to recognize those students who have developed the competencies necessary for success in the constantly changing workplace. The traditional knowledge and skills are still a part of agricultural mechanics technical content, but many other abilities are now necessary. Emphasis is placed on the way in which students work with others, access information, solve complex problems, select an appropriate technology, and apply the principles of science. The agricultural mechanics career development event balances problem solving abilities, with knowledge, skills, and experience. These abilities are evaluated for students working together as a team and for each student working independently.

Content Areas for the Event

The career development event will be developed from the following subject matter topics described under the five systems areas listed below.

- **Machinery & Equipment Systems**- repair, maintenance, processing, materials handling, adjustments
- **Marketing/Information Systems**- customer relations, accounting, communication, economics, safety, service calls, reading and understanding labels
- **Energy Systems**- mechanical power, electrical power, chemical power, wind power, solar power
- **Structural Systems**- storage, handling, disposal, concrete, plumbing, structural material selection, heating, ventilation, air conditioning
- **Environmental/Natural Resource Systems**- water quality, material compatibility, soil and water conservation, disposal of waste

LAPTOP COMPUTER RECOMMENDATION FOR 2008:

Beginning 2005, it was REQUIRED that each team has a laptop computer and printer. Please understand that the National FFA will no longer provide computers for this activity, so teams without this equipment are placing themselves at an extreme disadvantage. Teams should bring two laptop computers and one or two portable printers. The two computers will allow more than one team member to work on the team report at the same time and provides a backup in the event of a computer failure. The laptops must be IBM compatible and have a compact disk. Laptop computers that are several years old (5+) will present a disadvantage to students. A compact disk will be used to provide information for the team activity. The large computer files and graphics on the compact disk will operate very slowly on older operating systems and sometimes will lockup the software, requiring the computer to be rebooted. To summarize, each team is REQUIRED to bring their computers for use in the 2007 team activity.

Computer Equipment Checklist:

- Computer can read a compact disk (CD).
- The computer should be loaded with Internet Explorer, Word, Excel, and Adobe Acrobat Reader or their equivalent. Files may be provided in any or all of these formats.
- Computer should be TESTED with the printer prior to the contest. Note: The security settings on some computers may prevent configuration by regular users. To provide maximum flexibility during the contest it is recommended that security be relaxed or a admin login be required.
- Double check that paper, cables, and power supplies are included in your equipment.
- Team members should be familiar with basic word processing and spreadsheet functions. These are skills commonly needed in industry and are useful in this event.

During the 2007 team activity, each team will be issued two compact disks (one for each computer allowed). The compact disk will have the instructions and information specific to the activity and the final report will be typed and printed. Each team will use their printer(s) to printout the final report and any other information needed from the computer's hard drive or the compact disks. Teams may save any information they wish on the hard drive of their computers and they may access and use this information during the team activity.

Please Note: Teams may save any information they wish on the hard drive of their computers and they may access and use this information during the team activity. Students will NOT be allowed to bring any external storage medium (Compact Disks, zip disks, floppies, etc.) to the team activity. Students will NOT be allowed to establish a connection to the internet during the event.

SAFETY GLASSES ARE REQUIRED

All team members must wear safety glasses during the team and skill events. To enter the CDE area, students must have safety glasses in their possession. Each year there are individuals and teams that arrive for Wednesday's team activity and/or Thursday's skill activities without safety glasses. To enter the CDE area, students must have safety glasses in their possession.

USE OF HAND CALCULATORS

Each team member will need a calculator to complete the multiple-choice examination on Wednesday and the skill activates on Thursday. Students will **not** be allowed to share a calculator during the examination on Wednesday or during the skill activities on Thursday. The team activity will also require calculators, but team members may share them during this activity.

Event Theme for 2008:

PROCESSING SYSTEMS

This is the emphasis area for the 2008 National FFA Agricultural Mechanics Career Development Event.

2008 Structural Systems Activities

All students must wear safety glasses during the skill activities. To enter the CDE area students must have safety glasses in their possession. Contestants must bring a serviceable welding helmet and leather welding gloves and they must wear appropriate clothing and footwear for welding.

This year contestants will be required to read and interpret a working drawing and then utilize a selected arc welding process to fabricate or repair a mild steel part. Please check back frequently for additional updates.

Suggested References:

Textbooks:

- Modern Welding, Althouse, Turnquist, Bowditch and Bowditch, published by Goodheart-Willcox
- The Procedure Handbook of Arc Welding, published by The James F. Lincoln Arc Welding Foundation

Other textbooks will be announced as they are identified.

Other Reference Material:

- 'No Teacher Left Behind,' a CD training set available free of charge from Lincoln Electric Technical Training Department, www.lincolnelectric/teachers.

Other references will be announced as they are identified.

Associate Superintendent: Dr. Craig Morton, Stephen F. Austin State University, Nacogdoches, Texas, Telephone 1.936.468.3705. Email: rangermorton1972@yahoo.com

---

2008 Machine & Equipment Systems Activities

All students must wear safety glasses during the skill activities. To enter the CDE area, students must have safety glasses in their possession.

The Machine Systems Skill activity will be looking at the harvesting/ processing of bio-materials as an alternative fuel source. The skill activity might include the selection, sizing, adjusting, maintenance, etc., of a CNH round baler. The New Holland model is the BR7060 Silage Special w/CropCutter and the CIH models are RB454 Rotor Cutter Silage. Both units are capable of producing 4' width x 5' diameter round bales.

The skill activities will be generic and any specific information required for the skill activity will be provided at the event.

Suggested References:

Reference material will include CNH brochures, operators manuals, manufacturers web sites, etc.

Textbooks:

No textbooks have been identified at this time. As always, textbooks will be announced as they are identified.

Other Reference Material:

NH: www.newholland.com/na

CIH: www.caseih.com/na

These two web addresses will take the viewer to the respective home page of each site. From here, select "Products/haying equipment/round balers to access the specific product information literature and specs. This will provide you with the most current information about each baler.

Still other websites / references to review include:

- Ethanol From Cellulose: A General Review <http://www.hort.purdue.edu/newcrop/ncnu02/v5-017.html> www.hort.purdue.edu/newcrop/ncnu02/v5-017.html
- Cellulose Conversion Key to Fuel of the Future: NREL Improving Key ... <http://www.ethanol-gec.org/information/briefing/2.pdf> www.ethanol-gec.org/information/briefing/2.pdf

- Cellulose Conversion Towards Fuel Bioethanol www.brelsfordenginc.us/sitebuildercontent/sitebuilderfiles/report402.pdf <http://www.brelsfordenginc.us/sitebuildercontent/sitebuilderfiles/report402.pdf>
- Cellulose & Grain Based Technologies for Production of Fuel Ethanol <http://www.eia.doe.gov/oiaf/archive/aeo02/conf/sheehan/02-03-11NEMS.ppt> www.eia.doe.gov/oiaf/archive/aeo02/conf/sheehan/02-03-11NEMS.ppt
- Biofuels for Transport: Global Potential and Implications for ... - Google Books Result <http://books.google.com/books?id=hjw-UP43ylsC&pg=PA73&lpg=PA73&dq=cellulosic+conversion&source=web&ots=LUQHiaTCF7&sig=IIMxPE4LyyTeYCbPHPME7mEkthI&hl=en&sa=X&oi=b www.books.google.com/books?isbn=1844074226
- AgEcon Search: Item 8036 <http://ageconsearch.umn.edu/handle/8036> www.ageconsearch.umn.edu/handle/8036
- Biofuels and the Cellulose Alternative www.sorghumgrowers.com/admin/Portal/LinkClick.aspx?tabid=12922&table=Links&field=ItemID&id=16<http://www.sorghumgrowers.com/admin/Portal/LinkClick.aspx?tabid=12922&table=Links&field=ItemID&id=1692&link=Biofuels+and+the+Cellulosic+Alternative+2-pager+2-07.pdf>
- Cellulosic Ethanol <http://www.seco.cpa.state.tx.us/re_ethanol_cellulosic.htm> www.seco.cpa.state.tx.us/re_ethanol_cellulosic.htm
- New Technology Uses Cellulosic Biomass to Produce Ethanol <http://www.renewableenergyworld.com/rea/news/story?id=46004> www.renewableenergyworld.com/rea/news/story?id=46004
- Biofuel: Major Net Energy Gain From Switchgrass-based Ethanol <http://www.sciencedaily.com/releases/2008/01/080109110629.htm> www.sciencedaily.com/releases/2008/01/080109110629.htm
- Net energy of cellulosic ethanol from switchgrass -- Schmer et al ... <http://www.pnas.org/cgi/content/full/105/2/464?maxtoshow=&HITS=10&hits=10&RESULTFORMAT=&fulltext=cellulosic+ethanol&searchid=1&FIRSTINDEX=0&resourcetype=WCIT> www.pnas.org/cgi/content/full/105/2/464?maxtoshow=&HITS=10&hits=10&RESULTFORMAT=&fulltext...
- Developing An Advanced Cellulosic Biorefining Technology <http://www.harvestcleanenergy.org/conference/HCE7/PDFs/Lehrburger.pdf> www.harvestcleanenergy.org/conference/HCE7/PDFs/Lehrburger.pdf
- Solving the Need for Alternative Fuels through Agriculture ... <http://www.taes-weslaco.net/images/BioEnergy_Ag_Feedstocks_Overton_4_10_07.ppt> www.taes-weslaco.net/images/BioEnergy_Ag_Feedstocks_Overton_4_10_07.ppt
- Net energy of cellulosic ethanol from switchgrass <http://www.ethanolrfa.org/resource/cellulosic/documents/0704767105v1.pdf> www.ethanolrfa.org/resource/cellulosic/documents/0704767105v1.pdf

Other references will be announced as they are identified.

Associate Superintendent: Dr. Mack Strickland, Purdue University, Telephone 1.765.494.1222, Email: strick@ecn.purdue.edu

---

2008 Environment and Natural Resource Systems Skills

All students must wear safety glasses during the skill activities. To enter the CDE area, students must have safety glasses in their possession.

The problem solving/skills in the Environment and Natural Resource Systems area will primarily concentrate on irrigation, water movement through piping, and choosing/comparing pump specifications. Students should be able to calculate area, volume, and convert units such as cubic feet, gallons, feat of head, psi. Topics include pipe sizing, flow rates, pressure loss due to friction and impact of elevation change on static pressure. Deposition rates, evapotranspiration, irrigation scheduling, and deposition patterns from sprinklers may be involved in the activity. has not yet been determined by the committee. As soon as more is established, this information will be posted to the website. Please check back frequently for updates.

Textbooks:

Principles of Irrigation by Irrigation Association, 2003. Private Water Systems Handbook, MWPS-14, 1992.

Other Reference Material:

Website: Irrigation Association - http://www.irrigation.org/

Other references will be announced as they are identified.

Associate Superintendent: Dr. Douglas Kingman, Huntsville, TX, Telephone 1.936.294.1215, Email: dougkingman@shsu.edu

---

2008 Industry and Marketing Skill Activity

No palm pilot (PDA) and cell phone devices will be allowed in the contest area. The activity will involve problem solving and calculations. A calculator is recommended.

The activity will involve skills commonly used to choose, assemble, or repair processing systems equipment. The focus will be on **electric, hydraulic, and/or pneumatic systems commonly found used for process control.** Contestants should be able to use specification sheets, common tables (ex. wire size), and parts and repair manuals. The activity may involve reading a plan with common symbols, creating repair orders, parts lists, repair cost estimates, maintenance schedules, and/or determine component specifications. An understanding of the relationships between hydraulic flow, pressure, horsepower, force, and speed will be necessary for successful component selection. (NOTE: formulas will be provided, but contestants will be expected to choose the appropriate formulas from a list.) Skill area will not require any specific knowledge of the specific equipment used, but rather focus on the process.

Some examples might be (but activity will not be limited to):

- Determine the power requirement of an electric motor given the specification sheet.
- Determine which electric motor to order given basic specifications.
- Determine the minimum wire size for a control circuit.
- Select an appropriate sized hydraulic cylinder to achieve a specific force or extension speed.
- Select appropriate replacement parts from a parts diagram. (for example new seals for a cylinder).
- Select a hydraulic pump for a specific application.
- Determine the cost of components for a project given a parts list.
- Select an appropriate hydraulic motor given a torque and speed requirement.

- Determine the flow requirement for a specific hydraulic motor/speed combination.
- Determine an appropriate hydraulic filter for an application.
- Select an appropriate engine to drive a hydraulic pump given the pump specifications.

Suggested References for Activity:

Review the general references for the CDE. In addition the links below may help prepare for the activity. Manufacturer.s web sites are a rich source of component specifications. The sites listed below are on a few of many examples.

- http://www.hydraulic-gear-pumps.com/pdf/Hydraulic%20Symbols.pdf
- http://www.engineersedge.com/hydraulic/symbols/hydraulic_iso_schematic_symbols.htm
- http://www.parker.com/
- http://www.smcusa.com/default.asp
- http://www.baldor.com/products/ac_motors.asp
- http://www.donaldson.com/en/ih/low/index.html
- http://hydraulics.eaton.com/products/menu_main.htm
- http://www.airlinehyd.com/WebPages/Information/Knowledge_Center/Flash_Principles/Menu_Display.aspx (site also has common formulas)

Suggested References for Written Test:

- JD FMO Agricultural Machinery Safety
- Hunt Farm Power & Machinery Mgt
- JD Machinery Management

Notes to Coaches:

1. It is recommended that you review the competencies listed Industry and Marketing CDE rules.
2. The references listed above are general in nature and should be used as references for the competencies not study guides.

Associate Superintendent: Dr. Mike Spiess, California State University, Chico, Telephone 1.530.898.4554 Email: mspiess@csuchico.edu

---

2008 Energy Systems Activities

All students must wear safety glasses during the skill activities. To enter the CDE area, students must have safety glasses in their possession.

The problem solving/skills in the **Energy Systems** will involve the operation, installation, maintenance, and/or repair of 120/ 240 volt Single Phase Alternating Current Electrical Systems, Electric Motors and Controls and/or electrical equipment associated with **Processing Systems.** *****(See specific areas encompassed below)**

(From 2006-2010 National CDE Handbook) http://www.ffa.org/programs/cde/ - Download CDE Handbook- Scroll to page 43.

Students may be expected to:

Energy Systems Competencies-Problem Solving

(Numbers match numbers in Bulletin)

23. Use appropriate standards for agricultural application, including the National Electrical Code (NEC), Electrical Testing Laboratory (ETL), Factory Mutual, Underwriters Laboratory (UL), Canadian Standard Association (CSA) and/or OSHA standards.
24. Plan safe electrical circuits.
25. Select conductor type and size for specific applications.
26. Calculate voltage drop.
27. Determine electrical power requirements.
28. Identify the characteristics of single and three-phase circuits.
29. Plan and evaluate proper grounding systems and ground-fault protection.
30. Determine volt, amp and ohm relationships (Ohm's and other application laws).
31. Select adequate and appropriate lighting fixtures.
32. Make connections in a computer-simulated wiring task.
33. Select motors based upon type of application.
34. Interpret electric motor nameplate data.
35. Service electric motors.
36. Identify electric motors and motor parts.
37. Identify methods of providing electric motor protection.
38. Interpret power (horsepower, kilowatt), power factor, torque and other motor selection criteria.
41. Interpret wiring diagrams.
42. Identify and describe basic principles of controls including thermostats; humidistat; photoelectric; magnetic relays; programmable controllers; proximity switches and sensors; ultrasonics; timers and other time-delay equipment; and pressure, motion, limit, float and sail switches.
43. Select controls from supply catalogs, microforms, microfiche or computers.
44. Select controls for electrical applications.
45. Use low-voltage electrical control equipment.
46. Identify and select devices for automated systems.
51. Use safe wiring practices for specific applications.

Energy Systems – Skills

(Numbers match numbers in Bulletin)

20. Read schematics and sketch wiring circuits.
21. Attach conductors to terminals.
22. Install plugs and cord connector bodies.
23. Make proper splices and connections.
24. Troubleshoot electrical circuits using proper testing equipment and measuring devices.
25. Measure electrical circuits for voltage, amperage, resistance and wattage.
26. Install service entrance for single phase 120/240 V service or three-phase power.
27. Wire 120/240V service outlets.
28. Install electrical circuits, switching devices and appliances.
29. Install ground-fault circuit interrupters.
30. Make connections in a computer-simulated wiring task.
31. Troubleshoot electric motor circuits using proper testing equipment.
32. Connect a dual voltage motor to power source.
33. Change the direction of electric or hydraulic motor-rotation.
34. Disassemble and reassemble an electric motor.
35. Provide suitable motor over-current protection.
36. Service and lubricate and electric motor.
37. Check the running amperage and voltage of a motor.
38. Select and mount an electric motor on a machine.
39. Connect electric motor controls.
40. Install timer circuits and automation devices.
41. Install thermal and solid-state delay/relay controls.
42. Install a low-voltage motor control system.
43. Install sensing devices including thermostats, humidistat; photoelectric; magnetic relays; programmable controllers; proximity switches and sensors; ultrasonics; timers and other time delay equipment; and pressure, motion, limit, float and sail switches.

Suggested References:

-2008 National Electric Code

- http://www.nfpa.org/index.asp?cookie%5Ftest=1
- http://www.nfpa.org/catalog/product.asp?pid=70HB05&order_src=A291
- http://www.nfpa.org/catalog/product.asp?pid=70E04&order_src=A291

-Agricultural Wiring Handbook: (14th edition) (15th edition if becomes available)

- http://www.nfec.org/material_to_order/electricalwiring.htm

-Electrical Wiring for Livestock and Poultry Structures

- http://www.nfec.org/material_to_order/electricalwiring.htm

-AAVIM

- http://www.aavim.com/onlineshopping/aavimcatalog2.html#electwiring

Electrical Wiring Text: Ninth Edition/ISBN 0-89606-385-2.	**No. 305.6W (Text)**
Electrical Wiring CD-ROM Test Bank.	**No. 305SWCD.6W**
Understanding Electricity Text. ISBN 0-89606-357-7.	**No. 303.6W (book)**
Understanding Electricity CD-ROM TEST BANK.	**No. 303SWCD.6W (each)**
Electrical Controls Text, Second Edition, ISBN 0-89606-339-9.	**No. 306.6W (manual)**
Electrical Controls. Supporting Software.	**No. 306CD.6W (CD-ROM)**
Basics of Basics of Electric Motors Text. ISBN 0-89606-360-7.	**No. 301.6W Text**

-**Agricultural Mechanics Fundamentals & Applications**, Herrin and Cooper, 5th edition, Delmar Publishing,

ISBN 0766814106

- http://www.delmarlearning.com/browse_product_detail.aspx?

Other references will be announced as they are identified

Associate Superintendent: Mr. Von G. Peavy, Telephone 1.229.386.3868, Fax 1.229.391.6838 Email: vpeavy@doe.k12.ga.us

---

2008 Team Activity - PROCESSING SYSTEMS

All team members must wear safety glasses during the team event. To enter the CDE area, students must have safety glasses in their possession.

Team members will work together to complete the activity in two hours. This team event is worth 250 points. If a team member exhibits or performs any unsafe practice, points will be deducted from the total team score.

Equipment Provided: This has not yet been decided.

Equipment that the Team MUST provide: Teams will be expected to provide safety glasses, appropriate personal protective clothing, a laptop computer capable of reading CD's and a printer with cable.

Description of Team Activity: Team Activity will focus on pneumatics/hydraulics. Students should have knowledge and theory of basic components of a pneumatics/hydraulics system including: valves, pump, cylinders, actuators, circuits, and circuit symbols.

Please understand that the Associate Supt. reserves the right to make necessary changes to this activity based on the availability of materials and resources to successfully conduct this activity.

The students will be provided with the references and an answer sheet via digital media (ie. floppy, zip, USB drive or CD) that will work with the lap top computer that they bring with them.

Suggested References:

Textbooks:

Textbooks will be announced as they are identified.

Other Reference Material:

Links to references...
- http://www.linnbenton.edu/auto/day/mike/read.html
- http://www.precisionmeasure.com/microm1.htm Other references will be announced as they are identified.

Associate Superintendent: Dr. Ed Franklin, Telephone: 1.520.940.3718, Email: eafrank@ag.arizona.edu

---

The five year rotating schedule beginning with the year 2008:

YEAR	EVENT THEME
2008	Processing Systems
2009	Plant Production Systems
2010	Integrated Pest Management
2011	Animal Production Systems
2012	Material Handling Systems

SUGGESTED GENERAL REFERENCES

- D. M. Johnson, J. Harper, D.E. Lawver & P. Buriak. Mechanical Technology in Agriculture, Prentice Hall, 2001
- The National Fire Protection Association. National Electric Code, 2002.
- Ray V. Herren and Elmer L. Cooper. Agricultural Mechanics Fundamentals & Applications, 4th edition, Delmar Publishing.

If you have concerns about specific references that will be used, please contact the respective Associate Superintendent.

Dr. Steven Poe
2006-2008 Event Superintendent
University of Arizona University
PO Box 929, Ag 103
Yuma, AZ 85366-0926
928-317-6418 (voice)
928-344-7579 (fax)
spoe@ag.arizona.edu (email)

Return to the CDE Development Page